PCI®

PCI® Heavy Duty / Mine Duty Conveyor Drum Pulleys

PRODUCT SHOWCASE

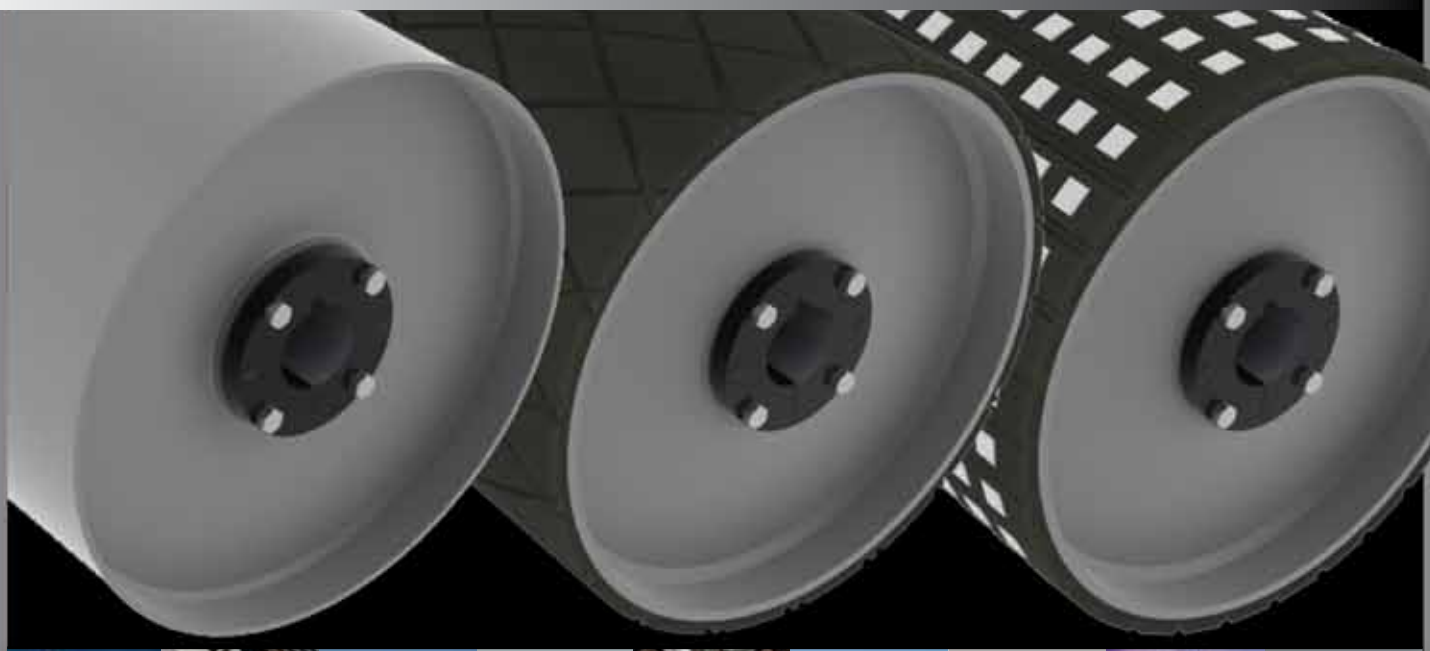

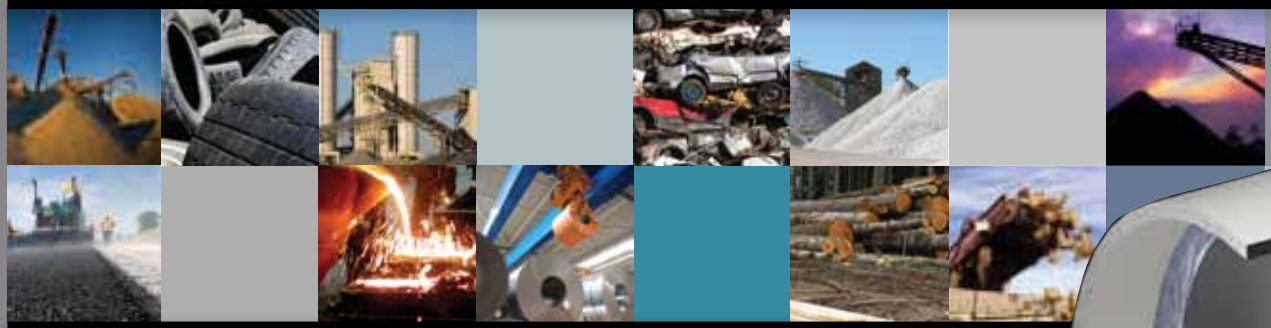

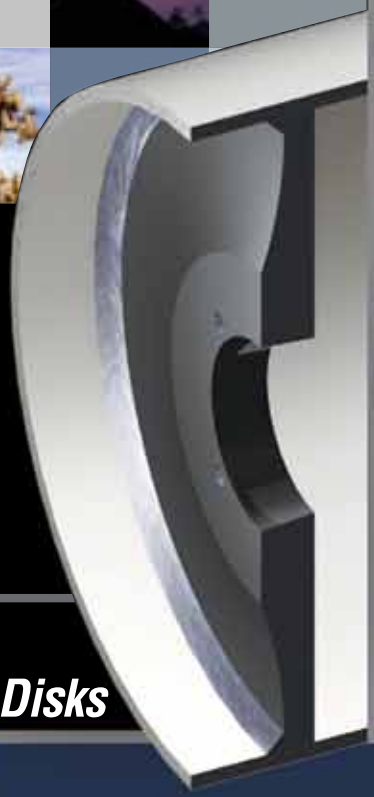

INCLUDING...

PCI® Contoured Integral End Disks

PCI®, ProCal Inc.

www.pcimfg.com

Toll Free 800.323.0966

HEAVY DUTY / MINE DUTY DRUM PULLEYS

For over 20 years, PCI has been manufacturing conveyor pulleys with quality and reliability at the forefront. Our Heavy Duty and Mine Duty conveyor pulleys are designed with selective weight distribution to ensure that you receive the optimum value for your purchase. This means you're getting the right amount of strength… in the right places.

◆ ***Does my application require a Heavy Duty or a Mine Duty conveyor pulley?***

The difference between a Heavy Duty and a Mine Duty conveyor pulley is component thickness. The thicker the components used, the greater the series name (heavy, mine, etc.). Applications with impact loads require consideration of component thicknesses for purposes of strength. Applications with loose, bulk materials require consideration to account for abrasion resistance and the increased possibility of point loading between the pulley and belt. Although it is possible to select specific component thicknesses per application, PCI offers the following products to satisfy common application requirements and simplify the selection process:

HEAVY DUTY

MINE DUTY

MINE DUTY XTRA

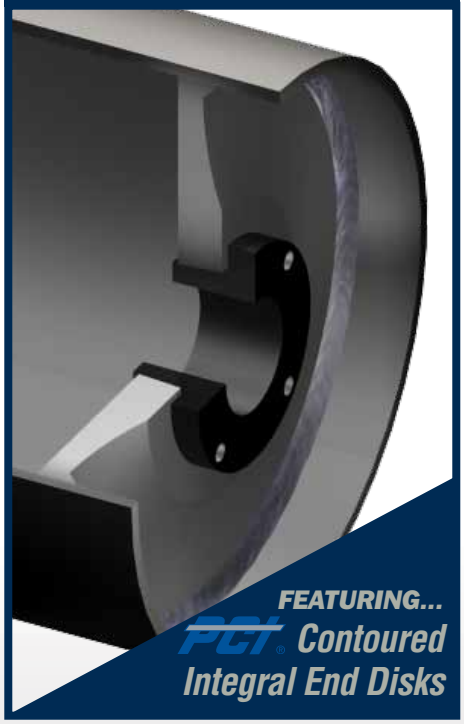

◆ ***Is a Mine Duty pulley rated to a greater capacity than a Heavy Duty pulley?***

While component thicknesses do contribute to overall pulley capacity, shaft diameter plays the primary role in achieving a desired load capacity. In other words, selecting a Mine Duty pulley over a Heavy Duty pulley won't necessarily achieve a greater load capacity if the axle is not sized to accommodate the application loads.

PCI®, ProCal Inc. P.O. Box 115 ◆ Alpena, MI 49707 ◆ direct dial# 989.358.6149 ◆ fax 989.358.7075 ◆ www.pcimfg.com ◆ 800.323.0966

HEAVY DUTY DRUM PULLEYS

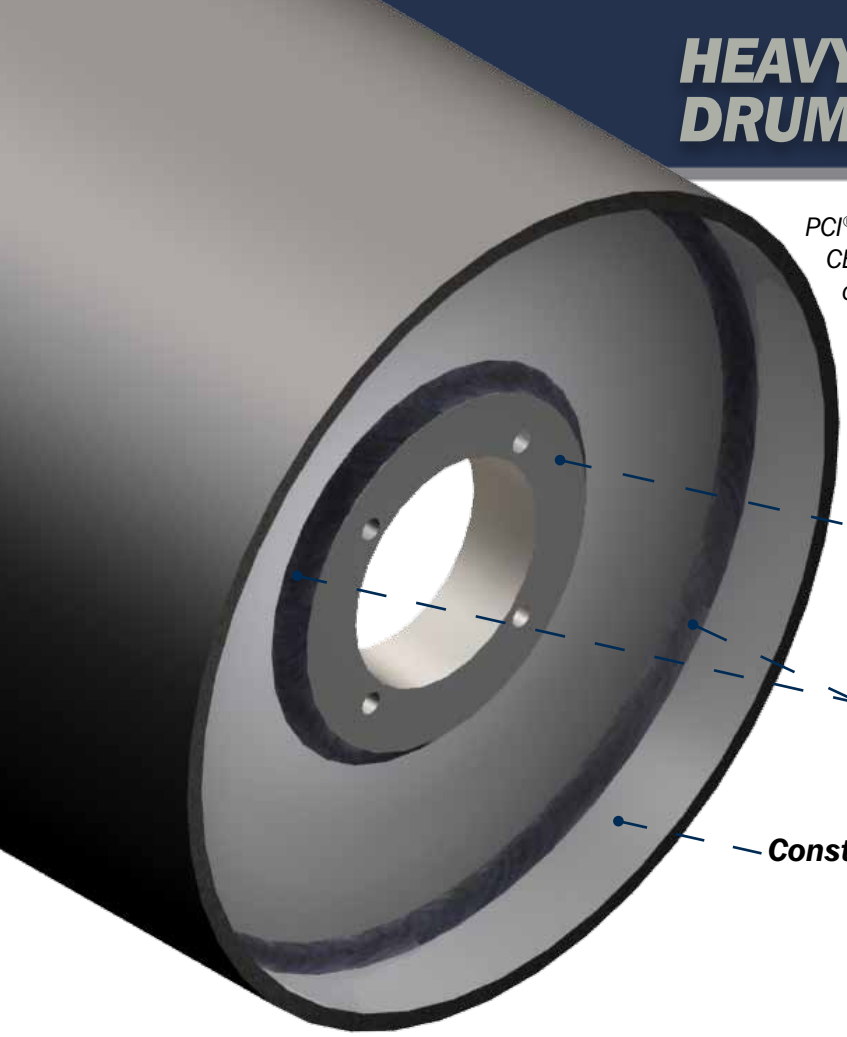

PCI® Heavy Duty conveyor pulleys are designed to meet CEMA construction standards for standard duty belt conveyor applications where packaged or bulk goods are being conveyed. Standard design features include:

Available in Several Hub Styles

Continuous Welds by Certified Welders

Construction Compliant with CEMA Standards

PRODUCT SPECIFICATIONS

Diameter: 14" through 60"
Wall Thickness: 1/4" through 3/8"
End Disk Thickness: 1/4" through 5/8"

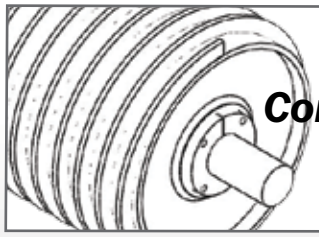

Spiral Configuration Available

HUB STYLES

Type 1
Plain Bore

Type 1
Welded Shaft

Type 2
Keyed Hubs

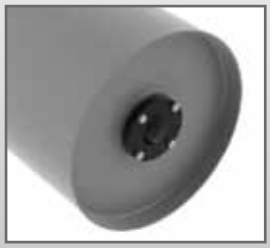

Type 4
Compression Hubs & Bushings

Type 5
Keyless Locking Devices

PCI®, ProCal Inc. *P.O. Box 115 ◆ Alpena, MI 49707 ◆ direct dial# 989.358.6149 ◆ fax 989.358.7075 ◆ www.pcimfg.com ◆ 800.323.0966*

MINE DUTY DRUM PULLEYS

PCI® Mine Duty conveyor pulleys exceed CEMA construction standards for more demanding conveyor applications where impact loads are likely. Standard design features include:

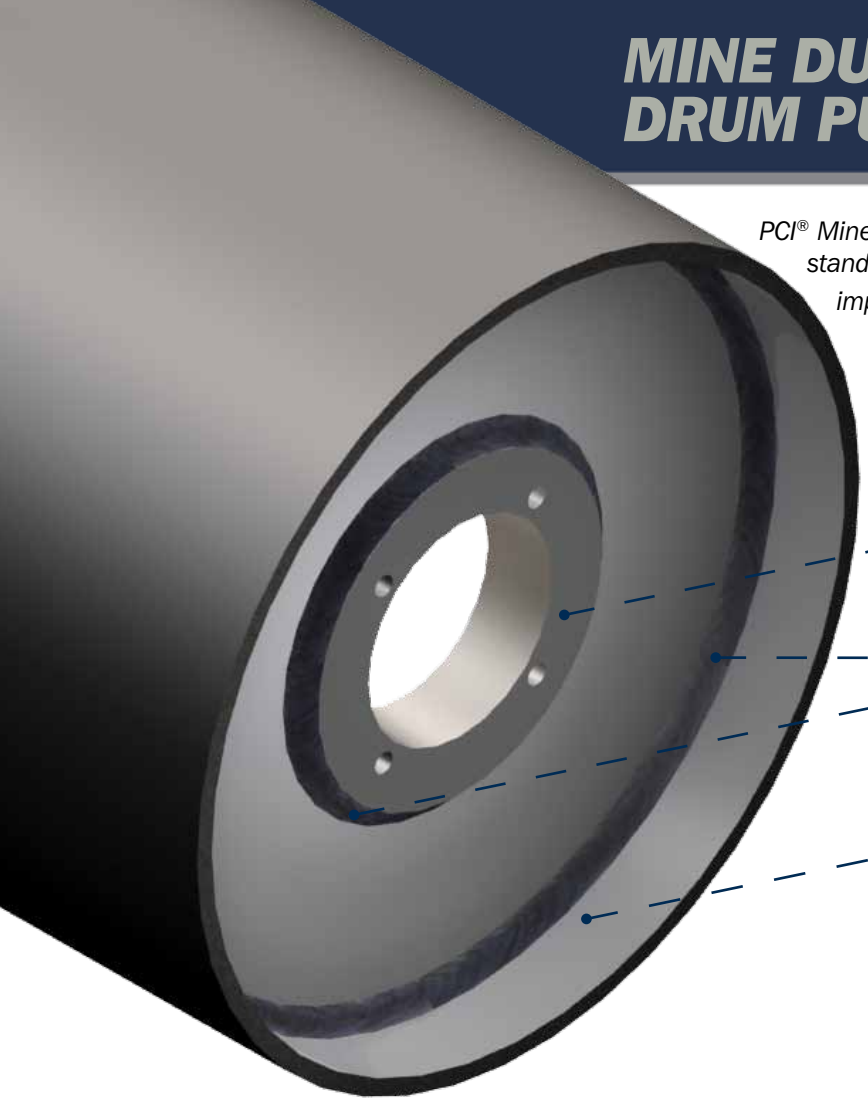

Available in Two Hub Styles

Continuous Welds by Certified Welders

Robust Construction Exceeds CEMA Standards

PRODUCT SPECIFICATIONS

Diameter:	14" through 60"
Wall Thickness:	5/16" through ½"
End Disk Thickness:	5/8" through 1 1/2"

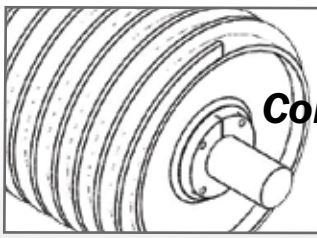

Spiral Configuration Available

HUB STYLES

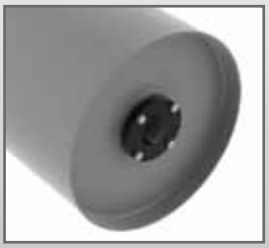

Type 4
Compression Hubs & Bushings

Type 5
Keyless Locking Devices

PCI®, ProCal Inc. *P.O. Box 115 • Alpena, MI 49707 • direct dial# 989.358.6149 • fax 989.358.7075 • www.pcimfg.com • 800.323.0966*

MINE DUTY XTRA DRUM PULLEYS

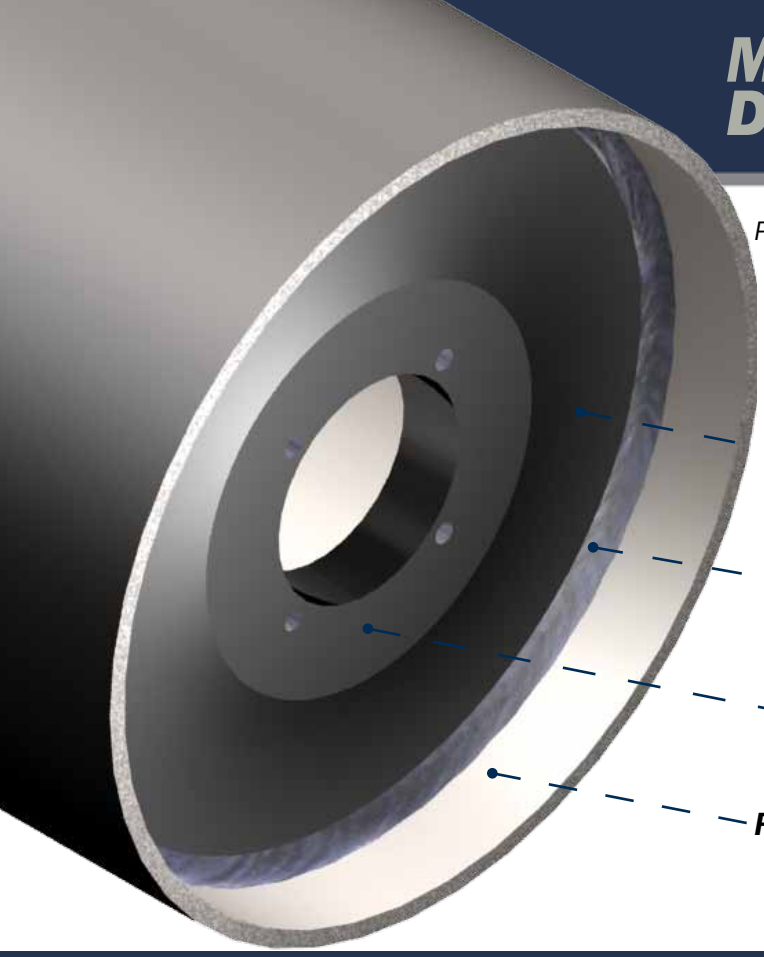

PCI® Mine Duty XTRA pulleys are designed to withstand the most rugged of bulk handling applications by incorporating several life enhancing features into product construction. These features minimize stress and fatigue in the critical load bearing components, ensuring maximum life and dependable performance:

PCI® Contoured Integral End-Disks

Continuous Welds by Certified Welders

Designed for XT® Bushing Shaft Connection

Robust Construction Exceeds CEMA Standards

PRODUCT SPECIFICATIONS

Diameter:	14" through 36"
Wall Thickness:	5/16" through ½"
End Disk Thickness:	1" through 3"*
Hub Styles:	PCI Contoured Integral End Disk

**Represents thickest portion of the contoured profile*

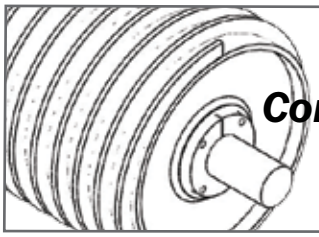

Spiral Configuration Available

PRODUCT COMPARISON

The images below illustrate the varied level of stress concentrations induced on three pulley configurations while they experienced loads of equal amounts. Widespread, consistent, blue and green coloration would indicate a low risk of stress induced failure

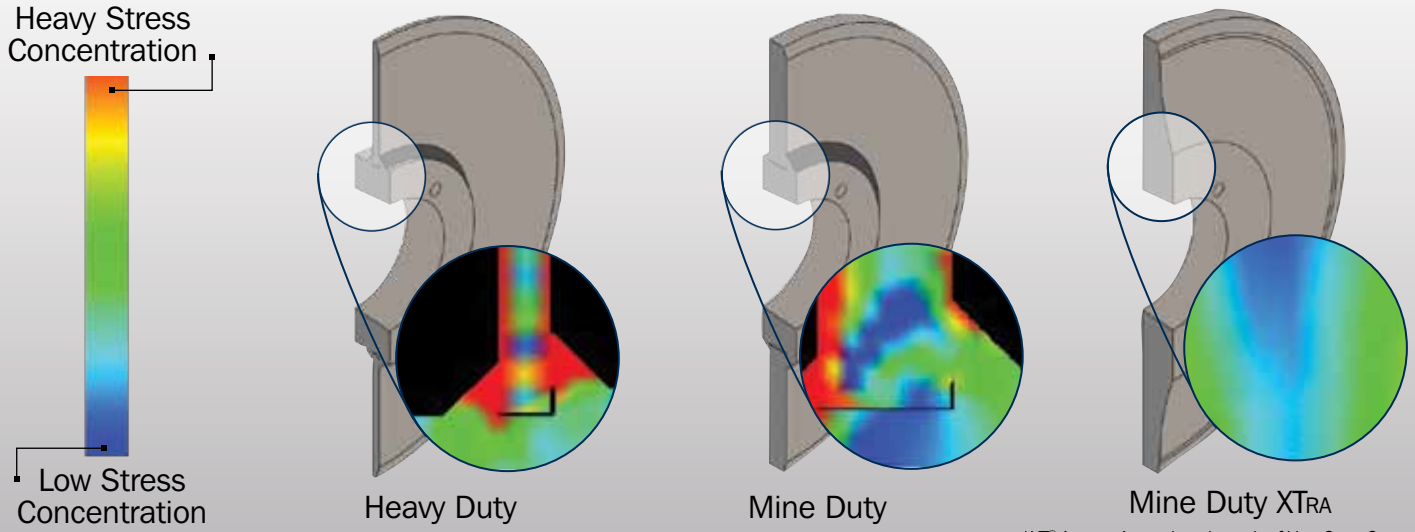

**XT® is a registered trademark of Van Gorp Corp.*

PCI®, ProCal Inc. P.O. Box 115 • Alpena, MI 49707 • direct dial# 989.358.6149 • fax 989.358.7075 • www.pcimfg.com • 800.323.0966

CONTOURED INTEGRAL END DISKS

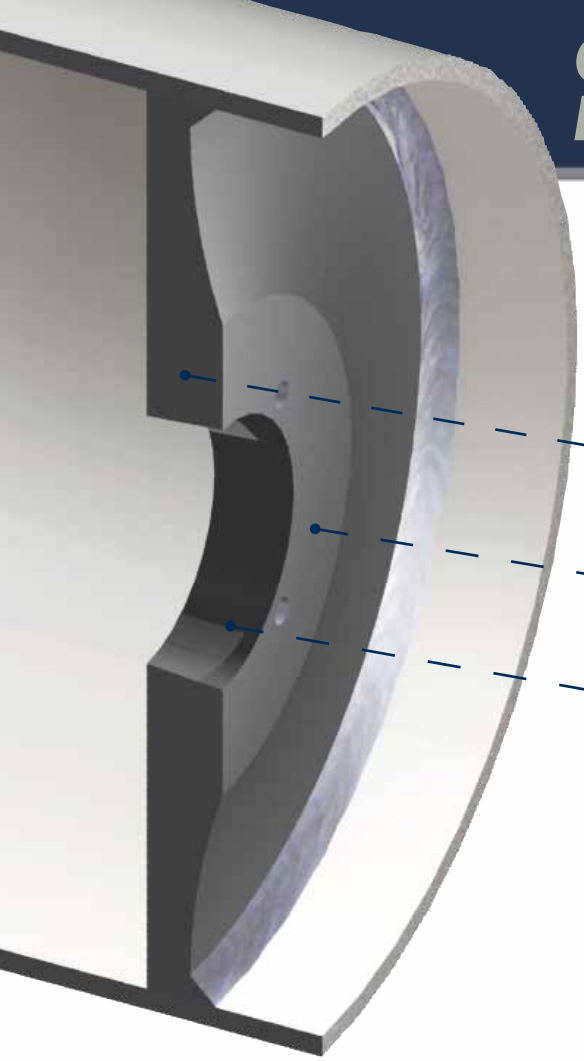

PCI® Contoured Integral End Disks are designed to maximize conveyor pulley life by reducing the risk of failure from end disk fatigue. PCI's design eliminates the need for a hub-to-disk weld by machining a hub directly into the surface of the end disk. In addition, PCI's special contour optimizes the surface stress of the end disk by allowing for adequate flexibility not provided by flat disk designs.

Profile of the End Disk is Contoured

Hub is Machined directly into the Face of the End Disk

Compatible with XT® Bushings

DESIGN FEATURES

CONTOURED PROFILE

Benefits: ◆ ***Even Distribution of Stress*** ◆ ***Optimized Flexibility***

Flat end disk designs discourage proper flexing of the end disk, thereby increasing the amount of stress induced in vulnerable areas. PCI's contoured profile allows for adequate flexibility under loads by increasing thickness where it benefits load accommodation and by decreasing thickness where the disk should be allowed to flex.

MACHINED INTEGRAL STYLE HUB

Benefits: ◆ ***Eliminates Stresses of a Welded Hub*** ◆ ***Improved Bore Alignment***

The leading cause of premature pulley failure is end disk fatigue. End disk fatigue typically causes a pulley to fail at the weakest point on the end disk, the area near the weld between the hub and end disk. The sudden change in geometry between the flat disk and cylindrical hub produces an area of increased stress concentration. Additionally, welding also distorts the end disk causing the hub bores to misalign from end to end. An integral style hub machined directly into the end disk eliminates the need for a weld between a hub and disk, thereby greatly reducing the risk of premature pulley failure.

XT® BUSHINGS COMPATIBILITY

Benefits: ◆ ***Optimized Taper Minimizes Stress*** ◆ ***Self Locking & Easy to Install***

The steep taper angle of the XT® compression hub and bushing system reduces the risk of premature pulley failure from end disk fatigue and the self locking, 4-bolt design simplifies installation procedures. These design specifications make it an ideal choice for use in conveyor pulley applications.

**XT® is a registered trademark of Van Gorp Corp.*

PCI®, ProCal Inc. P.O. Box 115 ◆ Alpena, MI 49707 ◆ direct dial# 989.358.6149 ◆ fax 989.358.7075 ◆ www.pcimfg.com ◆ 800.323.0966