LOAD BEARING ROLLER ASSEMBLIES

PCT®

Solutions Through Innovation

SOLUTIONS GUIDE

989.358.6148
www.pcimfg.com

LOAD BEARING ROLLER ASSEMBLIES

(989)358-6148
www.pcimfg.com

Cam Followers

CAM FOLLOWERS:

BEARING TYPE: Needle Bearings

Available from 2” to 20” roller body diameter, these units provide maximum radial capacity in lower speed applications. An extra thick roller body provides high load carrying capability by minimizing distortion.

DCB Rollers

DCB ROLLERS

BEARING TYPE: Cylindrical Roller Bearings

Available from 2” to 10” roller body diameter, these units provide maximum dynamic radial load capacity and allow for incidental thrust loads. DCB Rollers also offer rubber seals and are a drop-in replacement for Cam Followers.

XR Rollers

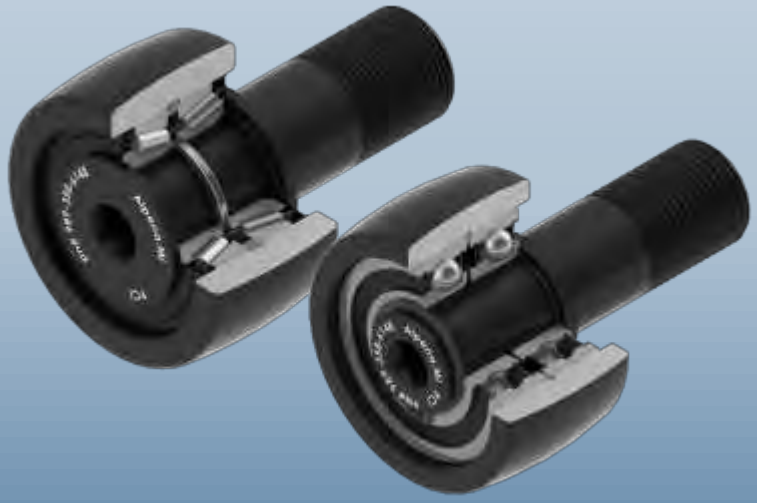

XR ROLLERS

BEARING TYPE: Ball or Tapered Roller Bearings

Available from 1.5” to 10” roller body diameter, PCI XR Rollers provide the rugged seals and thrust load capacity of a PCI Track Roller in the sizing of a Cam Follower, for an easy, drop-in, maintenance-free upgrade.

LOAD BEARING ROLLER ASSEMBLIES

(989)358-6148
www.pcimfg.com

Track Rollers

TRACK ROLLERS

BEARING TYPE: Ball or Tapered Roller Bearings

Available from 1" to 20" roller body diameter, PCI Track Rollers provide balanced radial and thrust load capacity, maximized sealing provisions and profile options which include Crowned, Flanged, Double Flanged, V-Grooved, U-Grooved and Channel & I-Beam profiles. On stud type versions, a stainless steel dust cover provides added protection against contamination.

Extreme Duty Solutions

STAINLESS STEEL

Stainless Steel options and fluorocarbon seals for the ultimate in corrosion resistance.

NON-METALLIC

Economical corrosion resistant alternative to stainless that reduces noise by eliminating metal-to-metal contact with a contamination exclusion design.

HIGH TEMPERATURE

Rated for operation up to 660°F and available as regreasable or sealed for life.

Industry Solutions

LUMBER & SAWMILL PARTS

Replacement rollers for sawmill, lumber & pressure treatment equipment.

OIL & GAS PARTS

PCI "TDR" Rollers are a drop-in replacement for units found on top drive equipment commonly used in the oilfield.

WASTE & REFUSE PARTS

Replacement parts for waste & refuse equipment.

Special & Custom Products

PCI manufactures special & custom assemblies in all shapes and sizes using a variety of internal bearing configurations. PCI delivers these rollers weeks ahead of the competition and requires no piece minimums. Whether it's dimensional adjustments, or analysis and application guidance to resolve problematic demands- **PCI PROVIDES SOLUTIONS THROUGH INNOVATION!**

Understanding Application Needs

Load Bearing Roller Assemblies

(989)358-6148
www.pcimfg.com

The answers to the following questions help to describe the demands of an application. Gaining an understanding of an application's demands is the first step in obtaining choices for a solution.

What are the Application Loads?

Load bearing roller assemblies are designed to support moving (dynamic) loads or stationary (static) loads. The load that the rollers will be supporting can be communicated using the following terminology:

RADIAL LOAD
Load applied 90 degrees to the bearing bore or axis of rotation

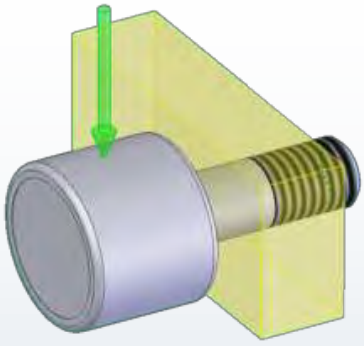

THRUST LOAD
Load applied parallel with the bearing bore or axis of rotation

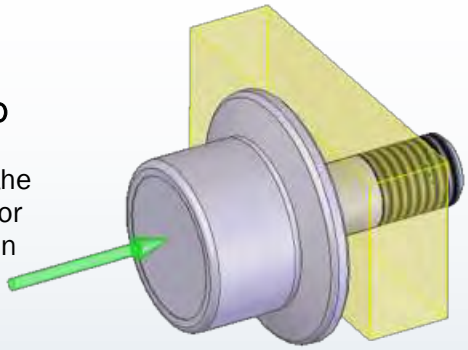

Rollers in many applications experience a load comprised of radial and thrust load which can be referred to as **Combination Load**. This load may not be intentionally designed into the application, but a combination load can be created as a result of misalignment or other functions within the application.

What are the Applied Speeds?

The rate at which the moving object will be travelling can be communicated in two different ways: in distance per time (FPM, M/sec) for linear movement or in revolutions per minute (RPM) for rotational movement. Depending on the type of application, one of these will best communicate the applied speed.

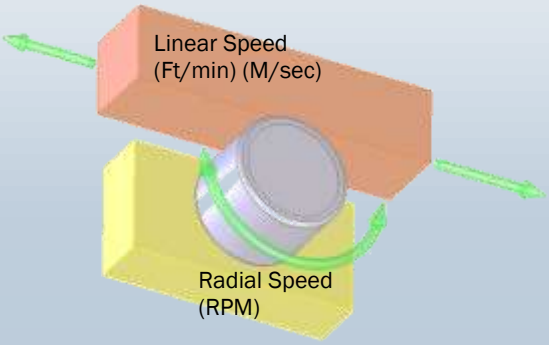

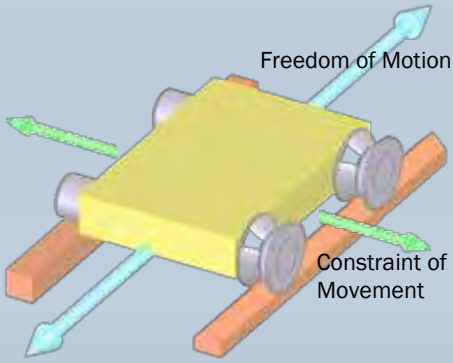

What are the Needs for Location?

Load bearing roller assemblies facilitate the location of moving loads or the contact surface by allowing for specific movements and by limiting unwanted ones. Applications must be reviewed to determine the required freedom of motion and the desired constraint of movement.

What is the Application Environment?

Environmental conditions can impact the life and performance of load bearing roller assemblies. Applications with exposure to the following substances may require special consideration: chemicals, vapors, water, temperature and solid particulate.

Chemicals

Vapor

H_2O

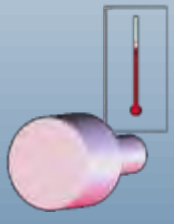
Temperature

Particulate

Designing Application Solutions

Load Bearing Roller Assemblies

(989)358-6148
www.pcimfg.com

It is important to account for the physical constraints within an application. The following diagrams outline common dimensional requirements and the terms by which they are referred.

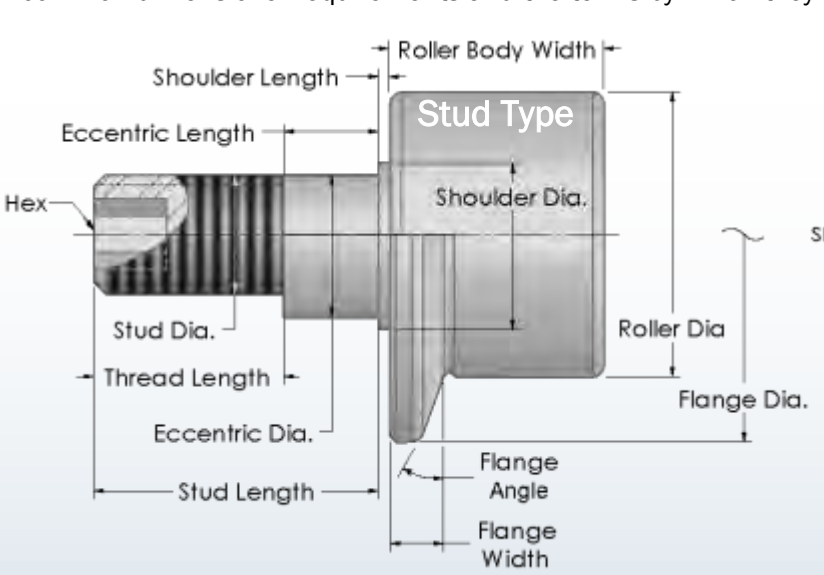

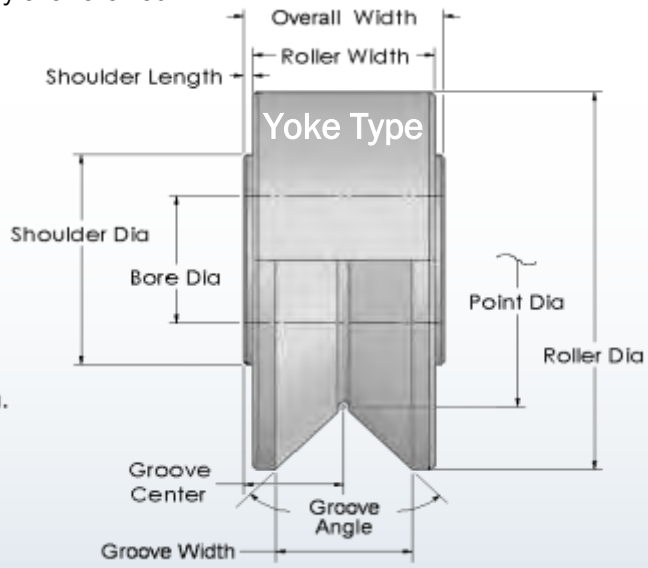

In addition to complying with physical constraints, rollers can be manufactured to accommodate multiple mounting arrangements. The two most common mounting arrangements are Stud Type and Yoke Type, both indicated in the diagrams below:

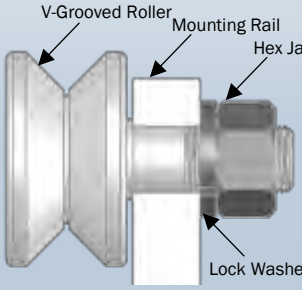

Through-Hole Mount Stud Type

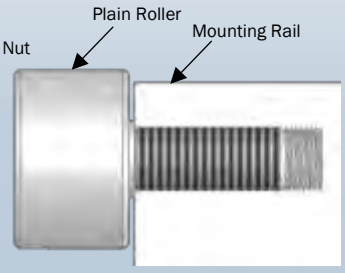

Blind Mount Stud Type

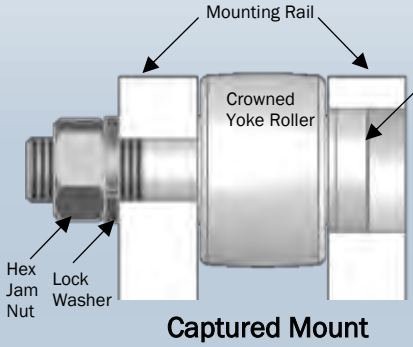

Captured Mount Yoke Type

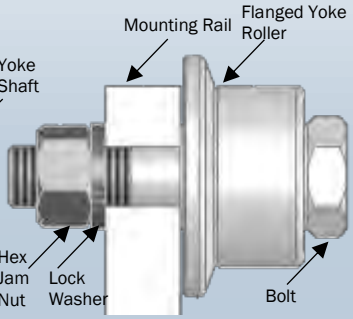

Through-Hole Mount Yoke Type

For applications requiring precision alignment between a roller and the mating contact surface, an eccentric style roller may be used to achieve uniform contact.

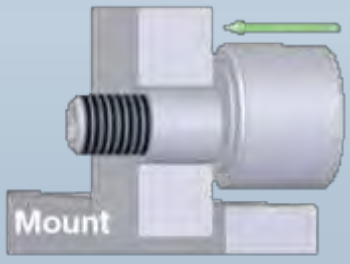

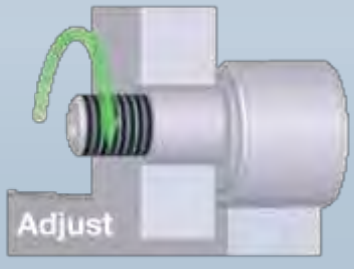

PCI Load Bearing Roller Assembly solutions can be manufactured with a variety of body profiles to help address concerns with debris, location and rail profile. Some examples include:

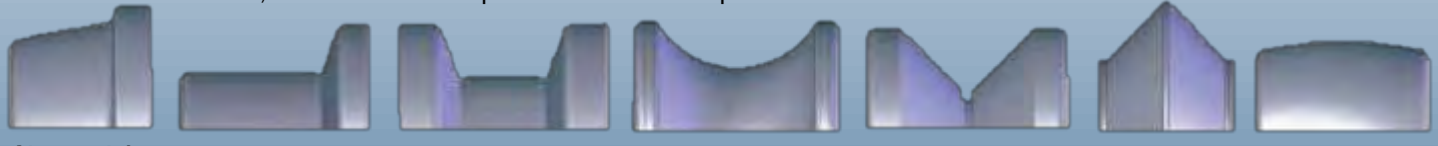

Channel & I-Beam | **Flanged** | **Double Flanged** | **U-Grooved** | **V-Grooved** | **Reverse V-Grooved** | **Crowned**

PCI®
Solutions Through Innovation

LOAD BEARING ROLLER ASSEMBLIES
CAM FOLLOWERS

Proven Toughness Under Radial Loads

THICK SECTION ROLLER BODY
Proven toughness under heavy radial loads

CASE HARDENED ROLLER BODY
Maintains the integrity of the assembly by preventing pre-mature fracture under shock loads

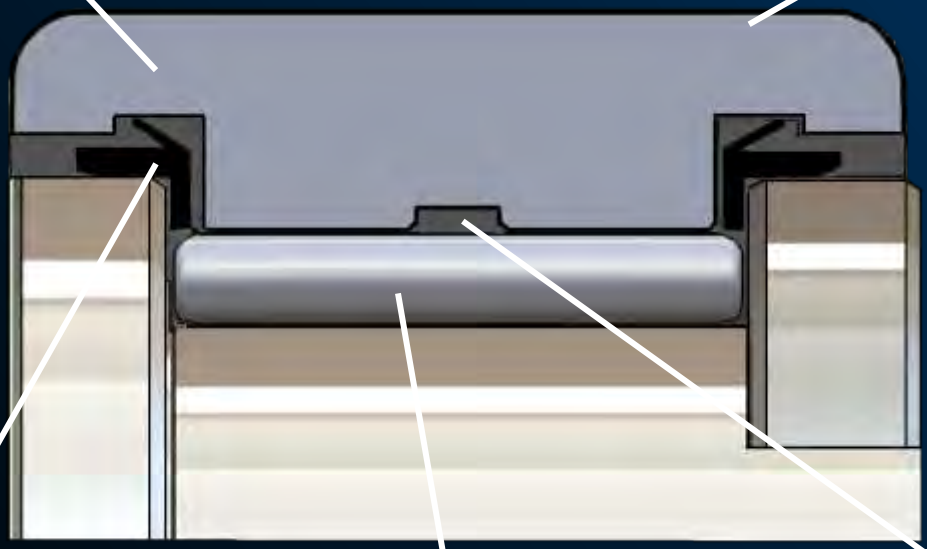

MOLY-FILLED NYLON LIP SEALS
Dual function seal provides low level thrust capacity and contamination exclusion

FULL COMPLEMENT NEEDLE BEARINGS
Reliable performance under moderate to heavy radial dynamic loads.

EASY INSTALLATION BORE
Efficient yoke roller installation by eliminating the need for tedious installation methods.

PREMIUM SYNTHETIC LUBRICANT
High performance grease resistant to break down to minimize downtime

BLACK OXIDE FINISH
PCI Cam Followers have a black oxide finish on all external surfaces.

989.358.6148
www.pcimfg.com

PCI®
Solutions Through Innovation

LOAD BEARING ROLLER ASSEMBLIES
DCB ROLLERS

Optimized Design for Maximum Life

IMPROVED SEALING
Rubber lip seals with expanded grease barrier maximize protection of rolling elements

CASE HARDENED ROLLER BODY
Maintains the integrity of the assembly by preventing pre-mature fracture under shock loads

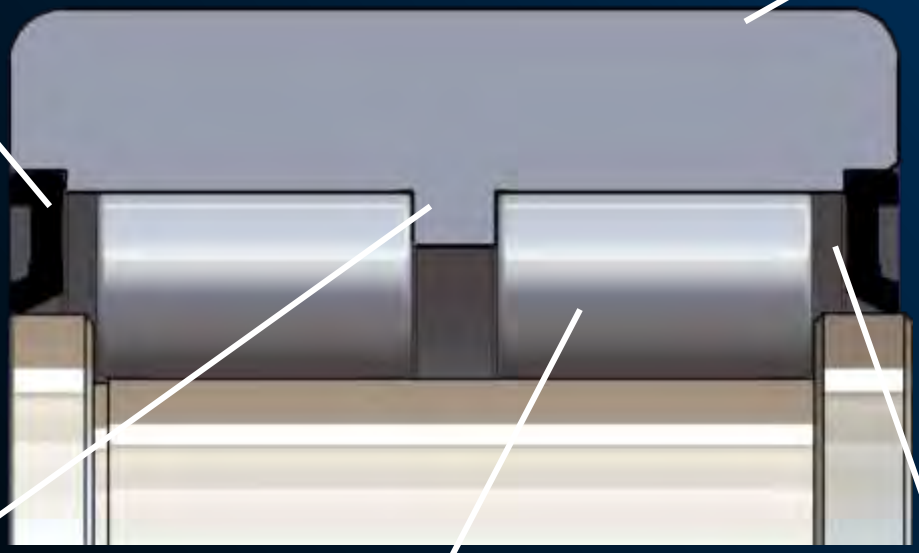

GUIDED ROLLING ELEMENTS
Provides efficient handling of intermittent combination loads by reducing skewing of the rolling elements and minimizing internal contact points.

QUANTITY & SIZE OF ROLLING ELEMENTS
Increases operating efficiency by providing industry proven performance in dynamic load conditions.

ROLLING ELEMENT PROFILE
Lengthens component life by minimizing fatigue of the load bearing surfaces

GREASE STORAGE
Maximizes roller life by offering up to 20% more grease storage than competitive designs

BLACK OXIDE FINISH
PCI DCB Rollers have a black oxide finish on all external surfaces.

989.358.6148
www.pcimfg.com

PCT®
Solutions Through Innovation

LOAD BEARING ROLLER ASSEMBLIES
"XR" ROLLERS

Track Roller Benefits, Cam Follower Sizing

CAM FOLLOWER EQUIVALENT
Drop-in dimensional replacement for needle bearing Cam Followers

CASE HARDENED ROLLER BODY
Maintains the integrity of the assembly by preventing pre-mature fracture under shock loads

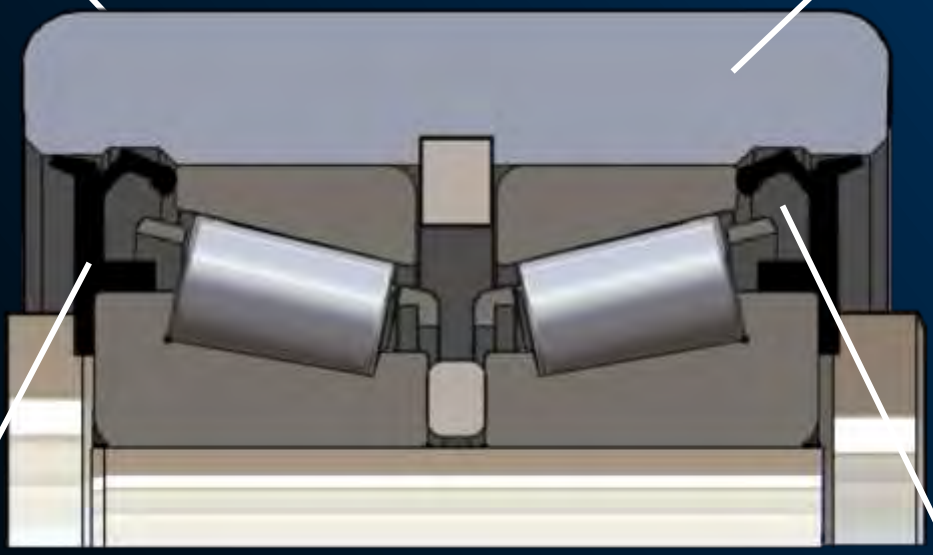

RUBBER LIP SEALS
Maximize protection of the bearing elements from external contamination

PREMIUM SYNTHETIC LUBRICANT
High performance grease resistant to break down to minimize downtime

MATCHED SET OF TAPERED ROLLER BEARINGS*

Maximum thrust load paired with significant radial load in a precision bearing package

**Features dependent on size of unit. See specifications for details.*

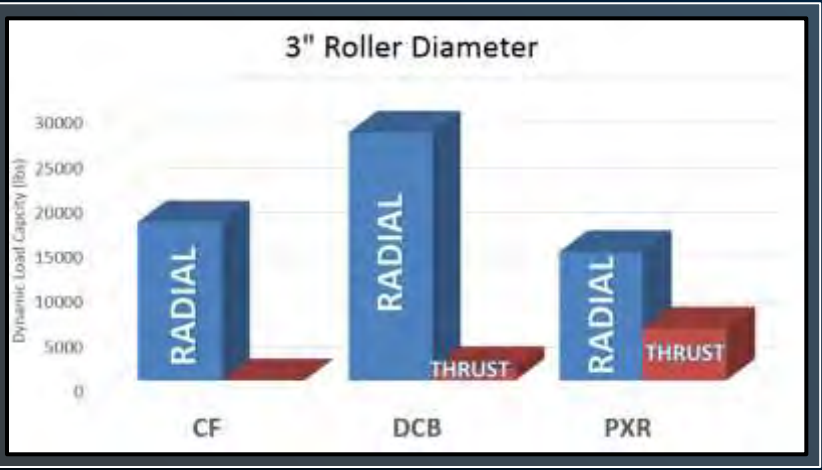

989.358.6148
www.pcimfg.com

PCT®
Solutions Through Innovation

LOAD BEARING ROLLER ASSEMBLIES
TRACK ROLLERS
With Ball or Tapered Roller Bearing Internals

Built To Last In Demanding Environments

TIGHT FITTING DUST COVER
Added protection against direct spray and contamination

CASE HARDENED ROLLER BODY
Maintains the integrity of the assembly by preventing pre-mature fracture under shock loads.

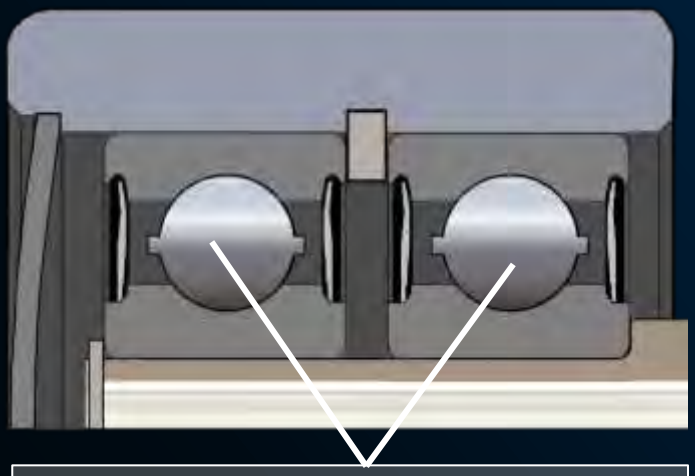

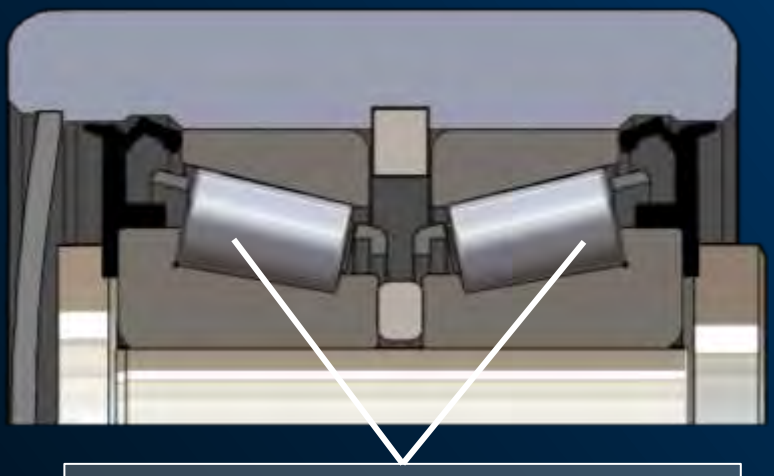

PRECISION DEEP GROOVE BALL BEARINGS
Performance under high speeds and combination loads.

MATCHED SET OF TAPERED ROLLER BEARINGS
Maximum thrust load paired with significant radial load capacity in a precision bearing package.

RUBBER LIP SEALS
Maximizes protection of the bearing elements from external contamination.

PREMIUM SYNTHETIC LUBRICANT
High performance grease resistant to break down to minimize downtime.

STRESSPROOF® STUD / INNER RACE
High strength material provides dependable performance under load.

989.358.6148
www.pcimfg.com

LOAD BEARING ROLLER ASSEMBLIES

PCI®

Solutions Through Innovation

EXTREME DUTY & INDUSTRY SOLUTIONS

989.358.6148
www.pcimfg.com

PCI®
Solutions Through Innovation

LOAD BEARING ROLLER ASSEMBLIES
EXTREME DUTY SOLUTIONS

Stainless Steel- 316 *Track Rollers & XR Rollers*

The Ultimate in Corrosion Resistance

316 STAINLESS STEEL ROLLER, STUD & DUST COVER*
Maximum corrosion resistance and added protection against direct spray and contamination.

440 STAINLESS STEEL PRECISION DEEP GROOVE BALL BEARINGS*
Optimum balance of corrosion resistance and dynamic load capacity.

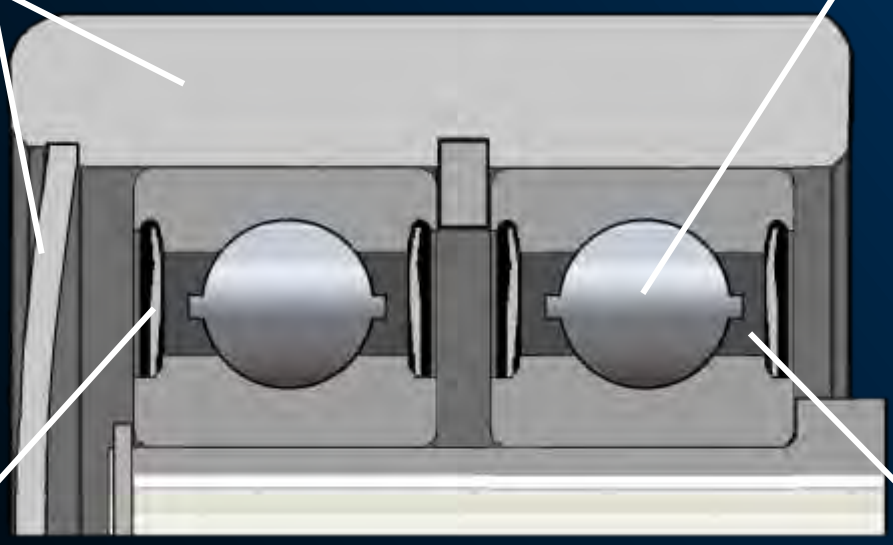

FLUOROCARBON LIP SEALS
Maximizes protection of the bearing elements from high heat, chemicals and external contamination.

SYNTHETIC FOOD GRADE LUBRICANT
Food grade grease with resistance to chemicals and wash-out.

WHY USE PCI 316 STAINLESS STEEL ROLLERS?

PCI® utilizes 316 Stainless Steel materials for the exposed surfaces of this series. Most stainless cam follower products utilize 400 series stainless steel for the same surfaces. 316 Stainless has nearly 40% greater resistance to pitting corrosion than 400 series grades.

If corrosion resistance is your goal, PCI 316 Stainless Steel Track Rollers & XR Rollers are your engineered stainless solution.

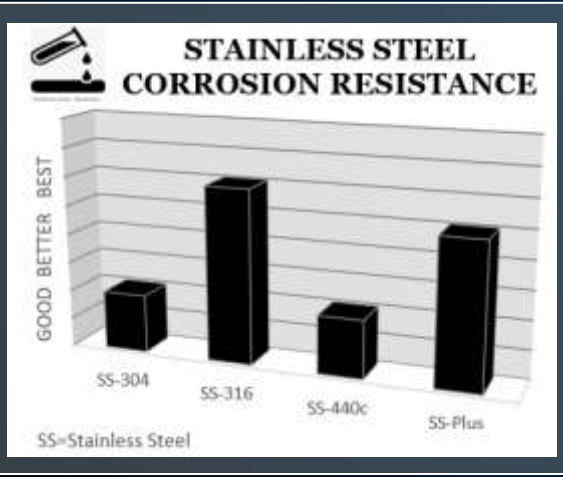

**Features dependent on size and style of unit. See specifications for details.*

989.358.6148
www.pcimfg.com

PCI®
Solutions Through Innovation

LOAD BEARING ROLLER ASSEMBLIES
EXTREME DUTY SOLUTIONS

Stainless Steel "PLUS" Track Rollers & XR Rollers

For Strength and Corrosion Resistance

"PLUS" STAINLESS STEEL ROLLER, HIGH STRENGTH STUD & DUST COVER*
High strength corrosion resistance and added protection against direct spray and contamination.

440 STAINLESS STEEL PRECISION DEEP GROOVE BALL BEARINGS*
Optimum balance of corrosion resistance and dynamic load capacity.

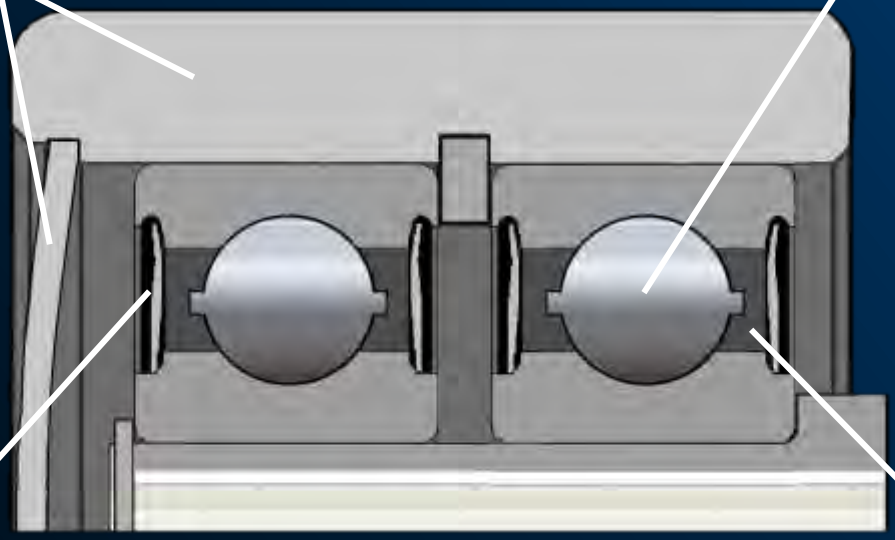

FLUOROCARBON LIP SEALS
Maximizes protection of the bearing elements from high heat, chemicals and external contamination.

SYNTHETIC FOOD GRADE LUBRICANT
Food grade grease with resistance to chemicals and wash-out.

WHY USE PCI STAINLESS STEEL "PLUS" SERIES ROLLERS?

PCI® Stainless Steel Plus series is manufactured with high strength stud materials, uses 440c stainless steel materials PLUS proprietary heat treatment roller bodies to withstand higher loads.

If superior load capacity while maintaining corrosion resistance is your goal, PCI Plus series Stainless Steel Track Rollers & XR Rollers are your engineered stainless steel solution.

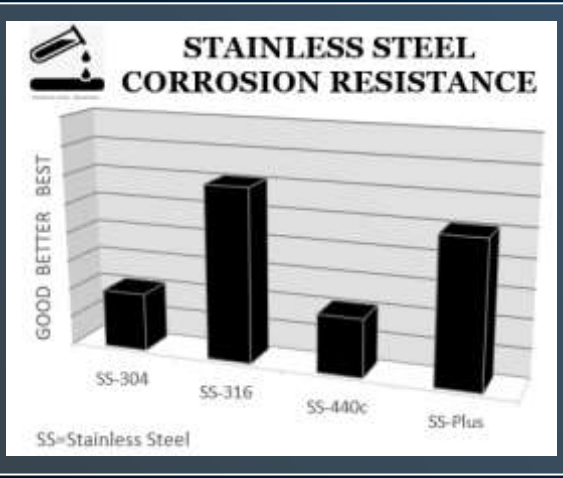

**Features dependent on size and style of unit. See specifications for details.*

989.358.6148
www.pcimfg. com

PCI®
Solutions Through Innovation

LOAD BEARING ROLLER ASSEMBLIES
EXTREME DUTY SOLUTIONS

Stainless Steel Class X *Track Rollers & XR*

Custom Built For Your Application

CUSTOM DESIGNED ROLLER, STUD & DUST COVER*
Corrosion resistance and protection against direct spray and contamination to meet your budget.

PRECISION BEARINGS* PER YOUR REQUEST
Optimum balance of corrosion resistance and dynamic load capacity.

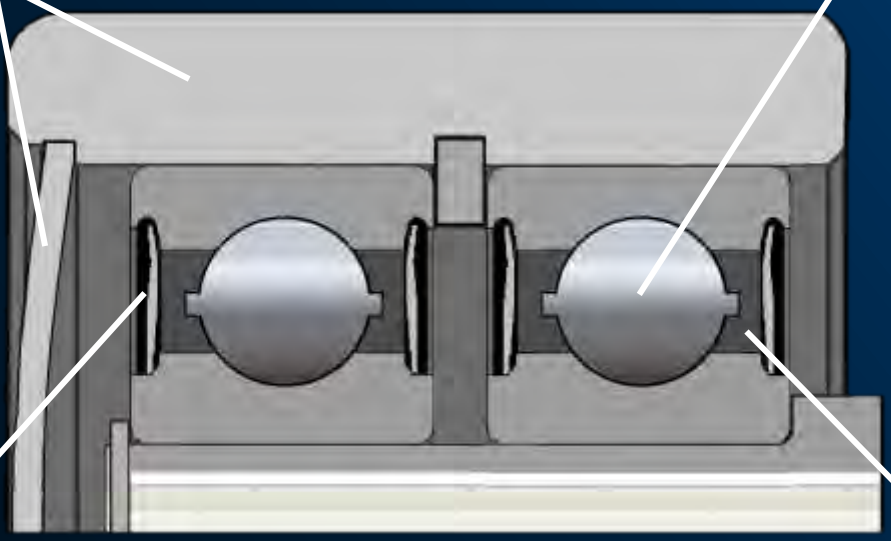

SEALS TO MEET YOUR NEEDS
Maximizes protection of the bearing elements from high heat, chemicals and external contamination.

LUBRICANT PER SPECIFICATION
Grease provided with resistance to chemicals and wash-out per your requirements.

WHY USE PCI STAINLESS STEEL CLASS X ROLLERS?

PCI's dedication to creating a solution for every application drives our Class X product offering. The materials, construction and features of a Class X Roller are custom designed every time to meet the individual needs of your unique application.

If PCI hasn't already designed your solution, ask for a Class X solution!

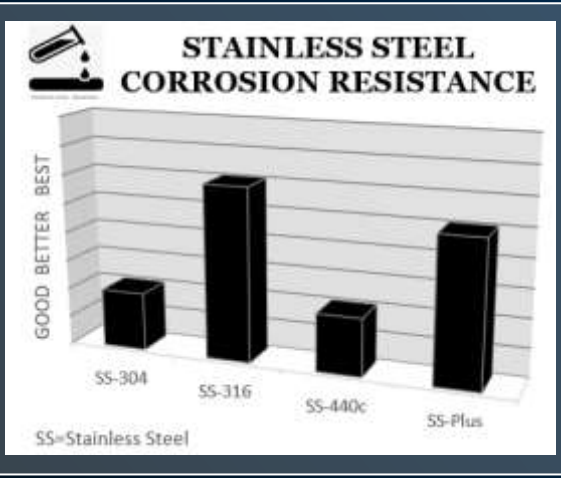

**Features dependent on size and style of unit. See specifications for details.*

989.358.6148
www.pcimfg. com

PCI®
Solutions Through Innovation

LOAD BEARING ROLLER ASSEMBLIES
EXTREME DUTY SOLUTIONS

Non-Metallic Track Rollers & XR Rollers

Non-Sparking, Quiet Performance

ONE PIECE SOLID END CAP DESIGN*
Solid protection of the bearing elements from external contaminants.

NON-METALLIC ROLLER BODY
- Minimizes Rolling Noise
- Reduces Track Wear
- Eliminates Need for Track Lubrication
- Reduces Rolling Resistance
- FDA Compliant Material
- Reduces Likelihood of Metal-on-Metal Sparking

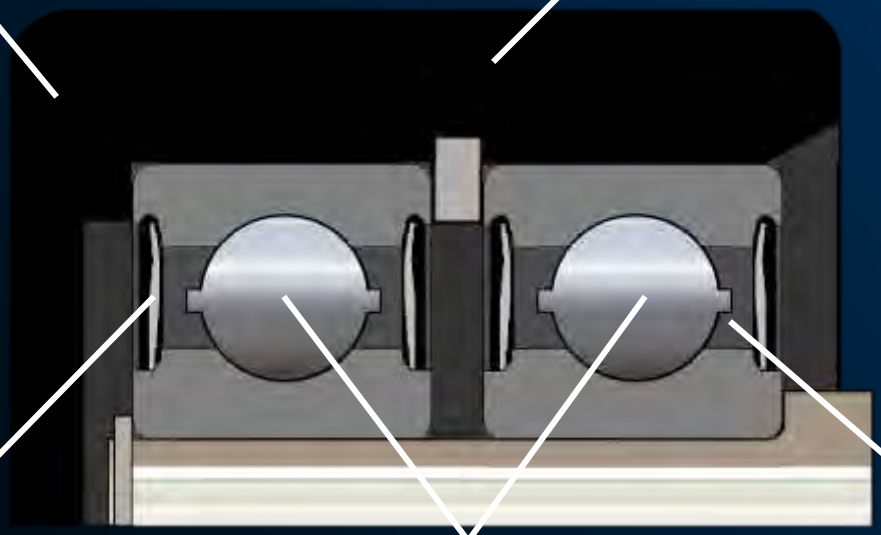

RUBBER LIP SEALS
Maximizes protection of the bearing elements from external contamination.

PRECISION DEEP GROOVE BALL BEARINGS
Dependable performance under high speeds and combination loads.

SYNTHETIC LUBRICANT
High performance grease resistant to break down to minimize downtime.

HOW QUIET ARE PCI NON-METALLIC TRACK ROLLERS?

PCI's Non-Metallic roller body design absorbs vibration and reduces the likelihood of metal on metal sparking to provide reliable Non-Sparking, Quiet Performance. PCI® Non-Metallic Rollers are more than 10 dBa quieter than their metallic counterparts – that's a 50% reduction in sound over traditional carbon steel Track Roller and Cam Follower products.

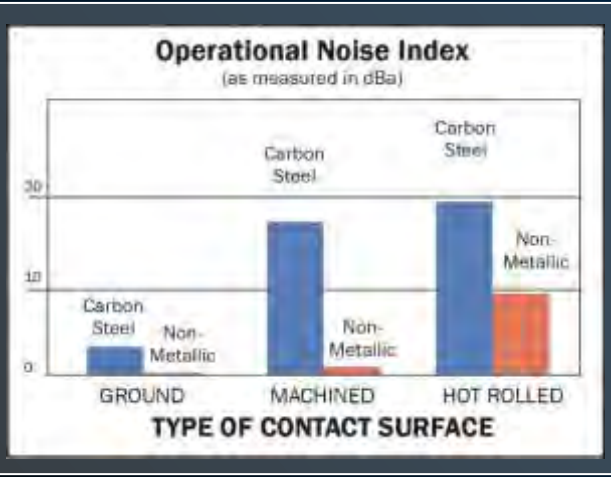

**Features dependent on size and style of unit. See specifications for details.*

989.358.6148
www.pcimfg.com

PCI®
Solutions Through Innovation

LOAD BEARING ROLLER ASSEMBLIES
EXTREME DUTY SOLUTIONS

High Temperature Track Rollers & XR Rollers

Defeat Extreme Heat – The 350°F Solution

TIGHT FIT STAINLESS STEEL COVER*
Maximum protection against direct spray and contamination

CASE HARDENED ROLLER BODY
Maintains the integrity of the assembly by preventing pre-mature fracture under shock loads.

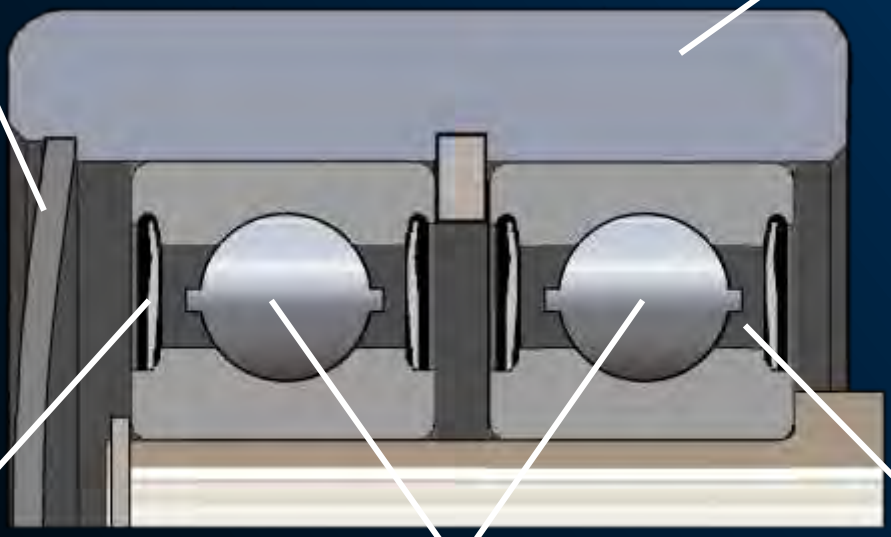

FLUOROCARBON LIP SEALS
Lasting protection of the bearing elements in high temperatures.

PRECISION HIGH TEMPERATURE DEEP GROOVE BALL BEARINGS
Performance under high speeds and combination loads in a high temperature environment.

PREMIUM HIGH TEMP LUBRICANT
Performance in applications up to 350°F (Continuous)

EXTEND PERFORMANCE WITH RELUBE

PCI High Temperature Rollers are available IN STOCK with regreasing provisions to maximize life in your demanding application. PCI High Temperature Rollers are supplied with wrench flats for easy installation and a readily accessible grease fitting located in the end of the stud for ease of maintenance. Add a "-R" suffix to the part number to Replenish & ReUse...Relube

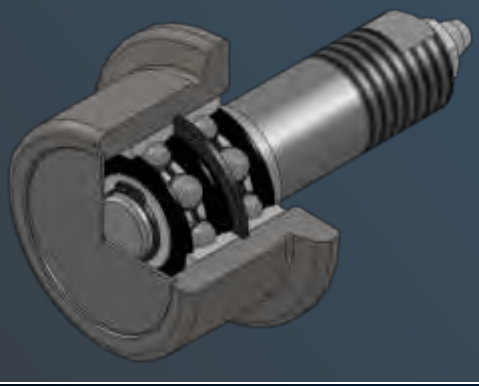

**Features dependent on size and style of unit. See specifications for details.*

989.358.6148
www.pcimfg.com

LOAD BEARING ROLLER ASSEMBLIES
EXTREME DUTY SOLUTIONS

High Temperature Track Rollers & XR Rollers

Defeat Extreme Heat – The 660°F Solution

TIGHT FIT STAINLESS STEEL COVER*
Maximum protection against direct spray and contamination

CASE HARDENED ROLLER BODY
Maintains the integrity of the assembly by preventing pre-mature fracture under shock loads.

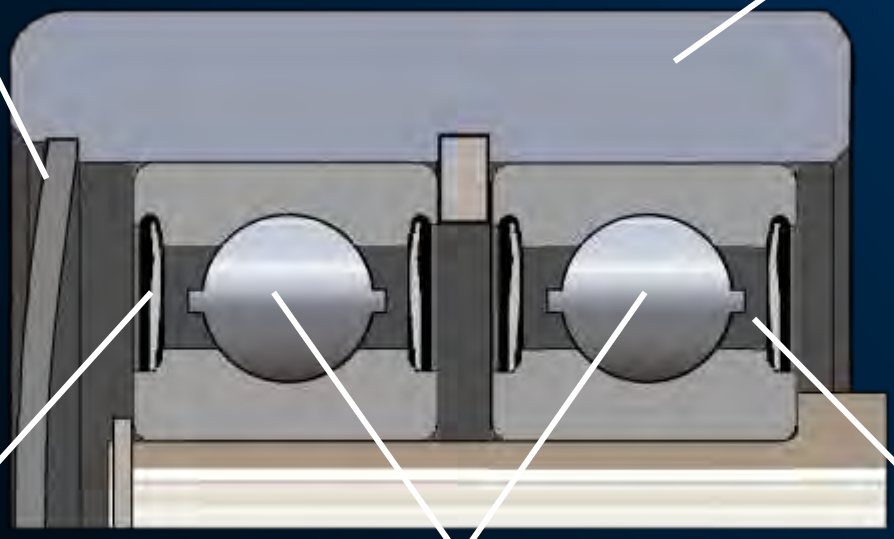

STEEL SHIELDS
Protection of the bearing elements in extreme temperatures.

PRECISION HIGH TEMP BALL OR TAPERED ROLLER BEARINGS
Performance under low speeds and combination loads in a high temperature environment.

HIGH TEMP SOLID LUBRICANT
Performance for up to 660°F (Continuous) with no relubrication required.

NO RELUBRICATION REQUIRED

PCI incorporates Cobra Solid Lubricant™ (CSL) - a mixture of graphite and binders creating a solid lubricant in this offering. The solidified mixture will fill the entire space between the races, rolling elements and cage to prevent metal to metal contact. CSL prevents contaminates from entering the bearing while providing a low coefficient of friction. Unlike petroleum-based lubricants, CSL cannot be washed out by steam or other common solvents, acids, or alkalis except under direct high-pressure. CSL will not drip or fling, is environmentally clean and may substantially increase bearing life and eliminate relubrication maintenance – even at high temperatures!

Cobra Solid Lubricant™ (CSL) is a trademark of Unique Technologies Associates

**Features dependent on size and style of unit. See specifications for details.*

989.358.6148
www.pcimfg.com

LOAD BEARING ROLLER ASSEMBLIES

PCT®

Solutions Through Innovation

WASTE & REFUSE SOLUTIONS

Comparable Replacements for
Trash Truck and Recycling Equipment

989.358.6148
www.pcimfg.com

LOAD BEARING
ROLLER ASSEMBLIES

PCI®
Solutions Through Innovation

LUMBER & SAWMILL SOLUTIONS

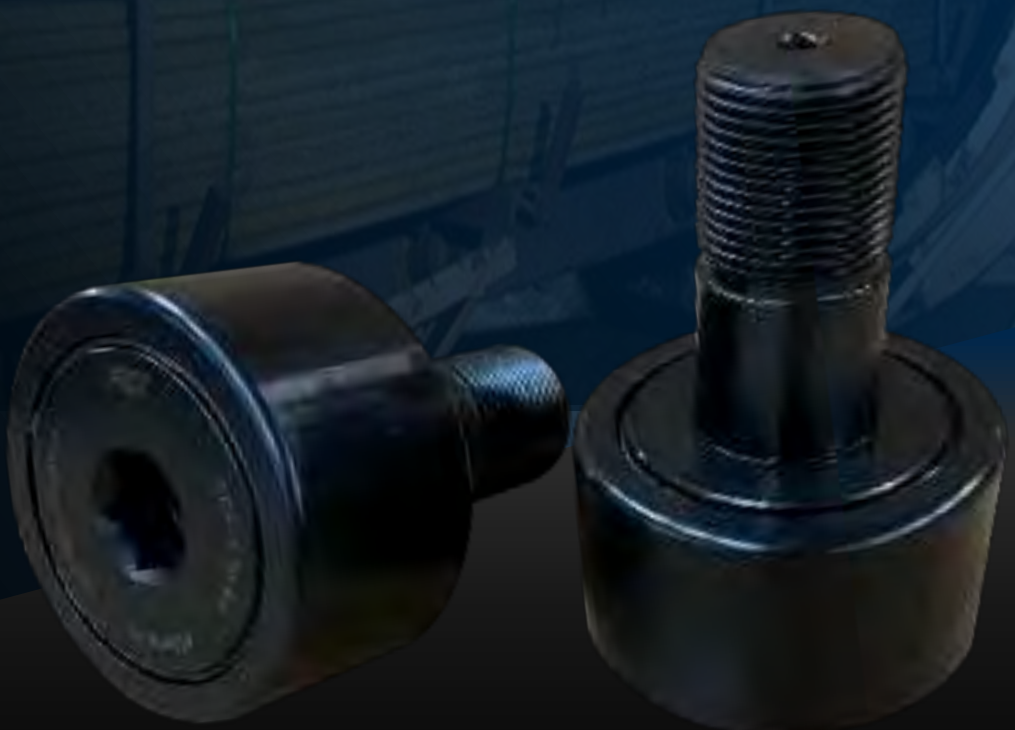

Comparable Replacements for
Lumber, Sawmill and Pressure Treatment Equipment

989.358.6148
www.pcimfg.com

LOAD BEARING
ROLLER ASSEMBLIES

PCT®
Solutions Through Innovation

OIL & GAS SOLUTIONS

Comparable Replacements for
#30158767-04 / F76105 – 4" Diameter Top Drive Roller
#30155438 / F76139 – 6" Diameter Top Drive Roller

989.358.6148
www.pcimfg.com

LOAD BEARING
ROLLER ASSEMBLIES

PCT®
Solutions Through Innovation

STEEL & METAL SOLUTIONS

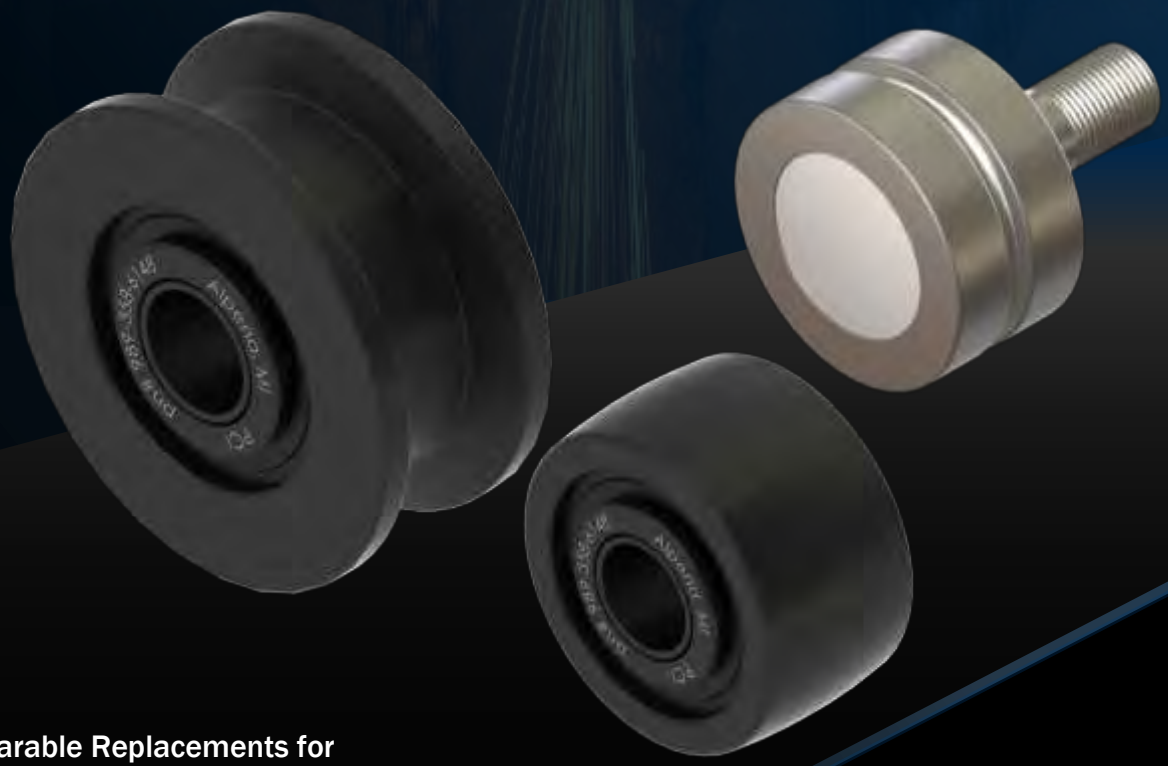

Comparable Replacements for
Steel Mill, Metal Processing and Treatment Equipment

989.358.6148
www.pcimfg.com

PCI®
Solutions Through Innovation

LOAD BEARING ROLLER ASSEMBLIES
SPECIALS & CUSTOMS

Solutions Through Innovation for More than 35 Years!

Can't Find What You Need?

Call PCI
(989) 358-6148

For additional information and to explore all the choices for your solution, contact PCI - ProCal Innovations, LLC. or visit us on the web at www.pcimfg.com.

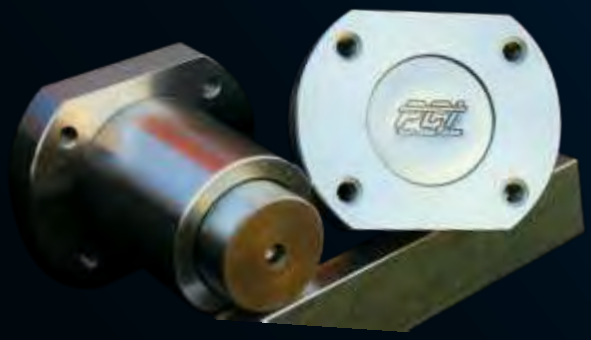

PCI is your trusted advisor - providing you with:

PRODUCT KNOWLEDGE

PCI has a thorough understanding of what it takes to manufacture a successful product. PCI provides you with pre-engineered products, modified units or products engineered specifically for your needs.

PCI provides you the maximum number of viable choices, so you can make the best decision for your economic and delivery requirements.

APPLICATION ASSISTANCE

Our experience and market research enables PCI to offer unique market solutions that fulfill industry requirements including:

- food processing
- marine
- mining
- petrochemical
- lumber, sawmill, wood
- steel and metal treatment

QUICKEST DELIVERY

Along with an innovative design, a solution needs desirable delivery. PCI secures your application solution when you need it.

Pre-Engineered - IN STOCK
Industry Solutions - IN STOCK
Plus, Industry Leading Delivery for Custom units including EXPEDITES

Cross Reference Charts

In Alphabetical Order by Reference Number

(989)358-6148
www.pcimfg.com

Industry Cross Reference		PCT
CCF 2 S	McG	SCCF-2.00-S
CCF 2 SB	McG	SCCF-2.00-SH
CCF 2 1/4 S	McG	SCCF-2.25-S
CCF 2 1/4 SB	McG	SCCF-2.25-SH
CCF 2 1/2 S	McG	SCCF-2.50-S
CCF 2 1/2 SB	McG	SCCF-2.50-SH
CCF 2 3/4 S	McG	SCCF-2.75-S
CCF 2 3/4 SB	McG	SCCF-2.75-SH
CCF 3 S	McG	SCCF-3.00-S
CCF 3 SB	McG	SCCF-3.00-SH
CCF 3 1/4 S	McG	SCCF-3.25-S
CCF 3 1/4 SB	McG	SCCF-3.25-SH
CCF 3 1/2 S	McG	SCCF-3.50-S
CCF 3 1/2 SB	McG	SCCF-3.50-SH
CCF 4 S	McG	SCCF-4.00-S
CCF 4 SB	McG	SCCF-4.00-SH
CCF 5 SB	McG	SCCF-5.00-SH
CCF 6 SB	McG	SCCF-6.00-SH
CCF 7 SB	McG	SCCF-7.00-SH
CCF 8 SB	McG	SCCF-8.00-SH
CCF 9 SB	McG	SCCF-9.00-SH
CCF 10 SB	McG	SCCF-10.00-SH
CCFD 2	McG	CDC-2.00
CCFD 2 1/4	McG	CDC-2.25
CCFD 2 1/2	McG	CDC-2.50
CCFD 2 3/4	McG	CDC-2.75
CCFD 3	McG	CDC-3.00
CCFD 3 1/4	McG	CDC-3.25
CCFD 3 1/2	McG	CDC-3.50
CCFD 4	McG	CDC-4.00
CCFD 5	McG	CDC-5.00
CCFD 6	McG	CDC-6.00
CCFE 2 S	McG	SCCFE-2.00-S
CCFE 2 SB	McG	SCCFE-2.00-SH
CCFE 2 1/4 S	McG	SCCFE-2.25-S
CCFE 2 1/4 SB	McG	SCCFE-2.25-SH
CCFE 2 1/2 S	McG	SCCFE-2.50-S
CCFE 2 1/2 SB	McG	SCCFE-2.50-SH
CCFE 2 3/4 S	McG	SCCFE-2.75-S
CCFE 2 3/4 SB	McG	SCCFE-2.75-SH
CCFE 3 S	McG	SCCFE-3.00-S
CCFE 3 SB	McG	SCCFE-3.00-SH
CCFE 3 1/4 S	McG	SCCFE-3.25-S
CCFE 3 1/4 SB	McG	SCCFE-3.25-SH
CCFE 3 1/2 S	McG	SCCFE-3.50-S
CCFE 3 1/2 SB	McG	SCCFE-3.50-SH
CCFE 4 S	McG	SCCFE-4.00-S
CCFE 4 SB	McG	SCCFE-4.00-SH
CCFH 2 S	McG	HCCF-2.00-S
CCFH 2 SB	McG	HCCF-2.00-SH
CCFH 2 1/4 S	McG	HCCF-2.25-S
CCFH 2 1/4 SB	McG	HCCF-2.25-SH
CCFH 2 1/2 S	McG	HCCF-2.50-S
CCFH 2 1/2 SB	McG	HCCF-2.50-SH
CCFH 2 3/4 S	McG	HCCF-2.75-S
CCFH 2 3/4 SB	McG	HCCF-2.75-SH
CCFH 3 S	McG	HCCF-3.00-S
CCFH 3 SB	McG	HCCF-3.00-SH
CCFH 3 1/4 S	McG	HCCF-3.25-S
CCFH 3 1/4 SB	McG	HCCF-3.25-SH
CCFH 3 1/2 S	McG	HCCF-3.50-S
CCFH 3 1/2 SB	McG	HCCF-3.50-SH
CCFH 4 S	McG	HCCF-4.00-S

Industry Cross Reference		PCT
CCFH 4 SB	McG	HCCF-4.00-SH
CCFH 5 SB	McG	HCCF-5.00-SH
CCFH 6 SB	McG	HCCF-6.00-SH
CCFH 7 SB	McG	HCCF-7.00-SH
CCYR 2 S	McG	YCCF-2.00-S
CCYR 2 1/4 S	McG	YCCF-2.25-S
CCYR 2 1/2 S	McG	YCCF-2.50-S
CCYR 2 3/4 S	McG	YCCF-2.75-S
CCYR 3 S	McG	YCCF-3.00-S
CCYR 3 1/4 S	McG	YCCF-3.25-S
CCYR 3 1/2 S	McG	YCCF-3.50-S
CCYR 4 S	McG	YCCF-4.00-S
CCYR 5 S	McG	YCCF-5.00-S
CCYR 6 S	McG	YCCF-6.00-S
CCYR 7 S	McG	YCCF-7.00-S
CCYR 8 S	McG	YCCF-8.00-S
CCYR 9 S	McG	YCCF-9.00-S
CCYR 10 S	McG	YCCF-10.00-S
CCYRD 3	McG	CDCY-3.00
CCYRD 3 1/4	McG	CDCY-3.25
CCYRD 3 1/2	McG	CDCY-3.50
CCYRD 4	McG	CDCY-4.00
CCYRD 5	McG	CDCY-5.00
CCYRD 6	McG	CDCY-6.00
CF 2 S	McG	SCF-2.00-S
CF 2 SB	McG	SCF-2.00-SH
CF 2 1/4 S	McG	SCF-2.25-S
CF 2 1/4 SB	McG	SCF-2.25-SH
CF 2 1/2 S	McG	SCF-2.50-S
CF 2 1/2 SB	McG	SCF-2.50-SH
CF 2 3/4 S	McG	SCF-2.75-S
CF 2 3/4 SB	McG	SCF-2.75-SH
CF 3 S	McG	SCF-3.00-S
CF 3 SB	McG	SCF-3.00-SH
CF 3 1/4 S	McG	SCF-3.25-S
CF 3 1/4 SB	McG	SCF-3.25-SH
CF 3 1/2 S	McG	SCF-3.50-S
CF 3 1/2 SB	McG	SCF-3.50-SH
CF 4 S	McG	SCF-4.00-S
CF 4 SB	McG	SCF-4.00-SH
CF 5 SB	McG	SCF-5.00-SH
CF 6 SB	McG	SCF-6.00-SH
CF 7 SB	McG	SCF-7.00-SH
CF 8 SB	McG	SCF-8.00-SH
CF 9 SB	McG	SCF-9.00-SH
CF 10 SB	McG	SCF-10.00-SH
CFD 2	McG	PDC-2.00
CFD 2 1/4	McG	PDC-2.25
CFD 2 1/2	McG	PDC-2.50
CFD 2 3/4	McG	PDC-2.75
CFD 3	McG	PDC-3.00
CFD 3 1/4	McG	PDC-3.25
CFD 3 1/2	McG	PDC-3.50
CFD 4	McG	PDC-4.00
CFD 5	McG	PDC-5.00
CFD 6	McG	PDC-6.00
CFE 2 S	McG	SCFE-2.00-S
CFE 2 SB	McG	SCFE-2.00-SH
CFE 2 1/4 S	McG	SCFE-2.25-S
CFE 2 1/4 SB	McG	SCFE-2.25-SH
CFE 2 1/2 S	McG	SCFE-2.50-S
CFE 2 1/2 SB	McG	SCFE-2.50-SH
CFE 2 3/4 S	McG	SCFE-2.75-S

Industry Cross Reference		PCT
CFE 2 3/4 SB	McG	SCFE-2.75-SH
CFE 3 S	McG	SCFE-3.00-S
CFE 3 SB	McG	SCFE-3.00-SH
CFE 3 1/4 S	McG	SCFE-3.25-S
CFE 3 1/4 SB	McG	SCFE-3.25-SH
CFE 3 1/2 S	McG	SCFE-3.50-S
CFE 3 1/2 SB	McG	SCFE-3.50-SH
CFE 4 S	McG	SCFE-4.00-S
CFE 4 SB	McG	SCFE-4.00-SH
CFH 2 S	McG	HCF-2.00-S
CFH 2 SB	McG	HCF-2.00-SH
CFH 2 1/4 S	McG	HCF-2.25-S
CFH 2 1/4 SB	McG	HCF-2.25-SH
CFH 2 1/2 S	McG	HCF-2.50-S
CFH 2 1/2 SB	McG	HCF-2.50-SH
CFH 2 3/4 S	McG	HCF-2.75-S
CFH 2 3/4 SB	McG	HCF-2.75-SH
CFH 3 S	McG	HCF-3.00-S
CFH 3 SB	McG	HCF-3.00-SH
CFH 3 1/4 S	McG	HCF-3.25-S
CFH 3 1/4 SB	McG	HCF-3.25-SH
CFH 3 1/2 S	McG	HCF-3.50-S
CFH 3 1/2 SB	McG	HCF-3.50-SH
CFH 4 S	McG	HCF-4.00-S
CFH 4 SB	McG	HCF-4.00-SH
CFH 5 SB	McG	HCF-5.00-SH
CFH 6 SB	McG	HCF-6.00-SH
CFH 7 SB	McG	HCF-7.00-SH
CH64L	RBC	HCCF-2.00-S
CH64LW	RBC	HCCF-2.00-SH
CH72L	RBC	HCCF-2.25-S
CH72LW	RBC	HCCF-2.25-SH
CH80L	RBC	HCCF-2.50-S
CH80LW	RBC	HCCF-2.50-SH
CH88L	RBC	HCCF-2.75-S
CH88LW	RBC	HCCF-2.75-SH
CH96L	RBC	HCCF-3.00-S
CH96LW	RBC	HCCF-3.00-SH
CH104L	RBC	HCCF-3.25-S
CH104LW	RBC	HCCF-3.25-SH
CH112L	RBC	HCCF-3.50-S
CH112LW	RBC	HCCF-3.50-SH
CH128L	RBC	HCCF-4.00-S
CH128LW	RBC	HCCF-4.00-SH
CH160LW	RBC	HCCF-5.00-SH
CH192LW	RBC	HCCF-6.00-SH
CH224LW	RBC	HCCF-7.00-SH
CLRY-1-1/2	Osb	CTRY-1.50
CLRY-1-3/4	Osb	CTRY-1.75
CLRY-2	Osb	CTRY-2.00
CLRY-2-1/4	Osb	CTRY-2.25
CLRY-2-1/2	Osb	CTRY-2.50E
CLRY-2-1/2-7	Osb	CTRY-2.50
CLRY-3	Osb	CTRY-3.00
CLRY-3-1/4	Osb	CTRY-3.25
CLRY-3-1/2	Osb	CTRY-3.50
CLRY-4	Osb	CTRY-4.00
CLRY-5	Osb	CTRY-5.00
CLRY-6	Osb	CTRY-6.00
CLRY-7	Osb	CTRY-7.00
CLRY-8	Osb	CTRY-8.00
CLRY-9	Osb	CTRY-9.00
CLRY-10	Osb	CTRY-10.00

Industry Cross Reference		PCT
CRBC 2	RBC	CDC-2.00
CRBC 2 1/4	RBC	CDC-2.25
CRBC 2 1/2	RBC	CDC-2.50
CRBC 2 3/4	RBC	CDC-2.75
CRBC 3	RBC	CDC-3.00
CRBC 3 1/4	RBC	CDC-3.25
CRBC 3 1/2	RBC	CDC-3.50
CRBC 4	RBC	CDC-4.00
CRBC 5	RBC	CDC-5.00
CRBC 6	RBC	CDC-6.00
CRBC 7	RBC	CDC-7.00
CRBC 8	RBC	CDC-8.00
CRBC 9	RBC	CDC-9.00
CRBC 10	RBC	CDC-10.00
CRBY 2	RBC	CDCY-2.00
CRBY 2 1/4	RBC	CDCY-2.25
CRBY 2 1/2	RBC	CDCY-2.50
CRBY 2 3/4	RBC	CDCY-2.75
CRBY 3	RBC	CDCY-3.00
CRBY 3 1/4	RBC	CDCY-3.25
CRBY 3 1/2	RBC	CDCY-3.50
CRBY 4	RBC	CDCY-4.00
CRBY 5	RBC	CDCY-5.00
CRBY 6	RBC	CDCY-6.00
CRBY 7	RBC	CDCY-7.00
CRBY 8	RBC	CDCY-8.00
CRBY 9	RBC	CDCY-9.00
CRBY 10	RBC	CDCY-10.00
CRS-32	Kyo	SCF-2.00-S
CRS-36	Kyo	SCF-2.25-S
CRS-40	Kyo	SCF-2.50-S
CRS-44	Kyo	SCF-2.75-S
CRS-48	Kyo	SCF-3.00-S
CRS-52	Kyo	SCF-3.25-S
CRS-56	Kyo	SCF-3.50-S
CRS-64	Kyo	SCF-4.00-S
CRSB-32	Kyo	SCF-2.00-SH
CRSB-36	Kyo	SCF-2.25-SH
CRSB-40	Kyo	SCF-2.50-SH
CRSB-44	Kyo	SCF-2.75-SH
CRSB-48	Kyo	SCF-3.00-SH
CRSB-52	Kyo	SCF-3.25-SH
CRSB-56	Kyo	SCF-3.50-SH
CRSB-64	Kyo	SCF-4.00-SH
CRSB-80	Kyo	SCF-5.00-SH
CRSB-96	Kyo	SCF-6.00-SH
CRSBC-32	Kyo	SCCF-2.00-SH
CRSBC-36	Kyo	SCCF-2.25-SH
CRSBC-40	Kyo	SCCF-2.50-SH
CRSBC-44	Kyo	SCCF-2.75-SH
CRSBC-48	Kyo	SCCF-3.00-SH
CRSBC-52	Kyo	SCCF-3.25-SH
CRSBC-56	Kyo	SCCF-3.50-SH
CRSBC-64	Kyo	SCCF-4.00-SH
CRSBC-80	Kyo	SCCF-5.00-SH
CRSBC-96	Kyo	SCCF-6.00-SH
CRSBCE-32	Kyo	SCCFE-2.00-SH
CRSBCE-36	Kyo	SCCFE-2.25-SH
CRSBCE-40	Kyo	SCCFE-2.50-SH
CRSBCE-44	Kyo	SCCFE-2.75-SH
CRSBCE-48	Kyo	SCCFE-3.00-SH
CRSBCE-52	Kyo	SCCFE-3.25-SH
CRSBCE-56	Kyo	SCCFE-3.50-SH

Cross Reference Charts

In Alphabetical Order by Reference Number

(989)358-6148
www.pcimfg.com

Industry Cross Reference		PCT
CRSBCE-64	Kyo	**SCCFE-4.00-SH**
CRSBE-32	Kyo	**SCFE-2.00-SH**
CRSBE-36	Kyo	**SCFE-2.25-SH**
CRSBE-40	Kyo	**SCFE-2.50-SH**
CRSBE-44	Kyo	**SCFE-2.75-SH**
CRSBE-48	Kyo	**SCFE-3.00-SH**
CRSBE-52	Kyo	**SCFE-3.25-SH**
CRSBE-56	Kyo	**SCFE-3.50-SH**
CRSBE-64	Kyo	**SCFE-4.00-SH**
CRSC-32	Kyo	**SCCF-2.00-S**
CRSC-36	Kyo	**SCCF-2.25-S**
CRSC-40	Kyo	**SCCF-2.50-S**
CRSC-44	Kyo	**SCCF-2.75-S**
CRSC-48	Kyo	**SCCF-3.00-S**
CRSC-52	Kyo	**SCCF-3.25-S**
CRSC-56	Kyo	**SCCF-3.50-S**
CRSC-64	Kyo	**SCCF-4.00-S**
CRSCE-32	Kyo	**SCCFE-2.00-S**
CRSCE-36	Kyo	**SCCFE-2.25-S**
CRSCE-40	Kyo	**SCCFE-2.50-S**
CRSCE-44	Kyo	**SCCFE-2.75-S**
CRSCE-48	Kyo	**SCCFE-3.00-S**
CRSCE-52	Kyo	**SCCFE-3.25-S**
CRSCE-56	Kyo	**SCCFE-3.50-S**
CRSCE-64	Kyo	**SCCFE-4.00-S**
CRSE-32	Kyo	**SCFE-2.00-S**
CRSE-36	Kyo	**SCFE-2.25-S**
CRSE-40	Kyo	**SCFE-2.50-S**
CRSE-44	Kyo	**SCFE-2.75-S**
CRSE-48	Kyo	**SCFE-3.00-S**
CRSE-52	Kyo	**SCFE-3.25-S**
CRSE-56	Kyo	**SCFE-3.50-S**
CRSE-64	Kyo	**SCFE-4.00-S**
CS64L	RBC	**SCCF-2.00-S**
CS64LW	RBC	**SCCF-2.00-SH**
CS64LWX	RBC	**SCCFE-2.00-SH**
CS72L	RBC	**SCCF-2.25-S**
CS72LW	RBC	**SCCF-2.25-SH**
CS72LWX	RBC	**SCCFE-2.25-SH**
CS80L	RBC	**SCCF-2.50-S**
CS80LW	RBC	**SCCF-2.50-SH**
CS80LWX	RBC	**SCCFE-2.50-SH**
CS88L	RBC	**SCCF-2.75-S**
CS88LW	RBC	**SCCF-2.75-SH**
CS88LWX	RBC	**SCCFE-2.75-SH**
CS96L	RBC	**SCCF-3.00-S**
CS96LW	RBC	**SCCF-3.00-SH**
CS96LWX	RBC	**SCCFE-3.00-SH**
CS104L	RBC	**SCCF-3.25-S**
CS104LW	RBC	**SCCF-3.25-SH**
CS104LWX	RBC	**SCCFE-3.25-SH**
CS112L	RBC	**SCCF-3.50-S**
CS112LW	RBC	**SCCF-3.50-SH**
CS112LWX	RBC	**SCCFE-3.50-SH**
CS128L	RBC	**SCCF-4.00-S**
CS128LW	RBC	**SCCF-4.00-SH**
CS128LWX	RBC	**SCCFE-4.00-SH**
CS160LW	RBC	**SCCF-5.00-SH**
CS192LW	RBC	**SCCF-6.00-SH**
CS224LW	RBC	**SCCF-7.00-SH**
CY64L	RBC	**YCCF-2.00-S**
CY72L	RBC	**YCCF-2.25-S**
CY80L	RBC	**YCCF-2.50-S**

Industry Cross Reference		PCT
CY88L	RBC	**YCCF-2.75-S**
CY96L	RBC	**YCCF-3.00-S**
CY104L	RBC	**YCCF-3.25-S**
CY112L	RBC	**YCCF-3.50-S**
CY128L	RBC	**YCCF-4.00-S**
CY160L	RBC	**YCCF-5.00-S**
CY192L	RBC	**YCCF-6.00-S**
CY224L	RBC	**YCCF-7.00-S**
CYR 2 S	McG	**YCF-2.00-S**
CYR 2 1/4 S	McG	**YCF-2.25-S**
CYR 2 1/2 S	McG	**YCF-2.50-S**
CYR 2 3/4 S	McG	**YCF-2.75-S**
CYR 3 S	McG	**YCF-3.00-S**
CYR 3 1/4 S	McG	**YCF-3.25-S**
CYR 3 1/2 S	McG	**YCF-3.50-S**
CYR 4 S	McG	**YCF-4.00-S**
CYR 5 S	McG	**YCF-5.00-S**
CYR 6 S	McG	**YCF-6.00-S**
CYR 7 S	McG	**YCF-7.00-S**
CYR 8 S	McG	**YCF-8.00-S**
CYR 9 S	McG	**YCF-9.00-S**
CYR 10 S	McG	**YCF-10.00-S**
CYRD 3	McG	**PDCY-3.00**
CYRD 3 1/4	McG	**PDCY-3.25**
CYRD 3 1/2	McG	**PDCY-3.50**
CYRD 4	McG	**PDCY-4.00**
CYRD 5	McG	**PDCY-5.00**
CYRD 6	McG	**PDCY-6.00**
FCF 1 1/2	McG	**FTR-1.50**
FCF 1 3/4	McG	**FTR-1.75**
FCF 2	McG	**FTR-2.00**
FCF 2 1/4	McG	**FTR-2.25**
FCF 2 1/2	McG	**FTR-2.50**
FCF 2 3/4	McG	**FTR-2.75**
FCF 3	McG	**FTR-3.00**
FCF 3 1/4	McG	**FTR-3.25**
FCF 3 1/2	McG	**FTR-3.50**
FCF 4	McG	**FTR-4.00**
FCF 4 1/2	McG	**FTR-4.50**
FCF 5	McG	**FTR-5.00**
FCF 6	McG	**FTR-6.00**
FCF 7	McG	**FTR-7.00**
FCF 8	McG	**FTR-8.00**
FCFE 1 1/2	McG	**FTRE-1.50**
FCFE 1 3/4	McG	**FTRE-1.75**
FCFE 2	McG	**FTRE-2.00**
FCFE 2 1/4	McG	**FTRE-2.25**
FCFE 2 1/2	McG	**FTRE-2.50**
FCFE 2 3/4	McG	**FTRE-2.75**
FCFE 3	McG	**FTRE-3.00**
FCFE 3 1/4	McG	**FTRE-3.25**
FCFE 3 1/2	McG	**FTRE-3.50**
FCFE 4	McG	**FTRE-4.00**
FCYR 3	McG	**FTRY-3.00**
FCYR 3 1/4	McG	**FTRY-3.25**
FCYR 3 1/2	McG	**FTRY-3.50**
FCYR 4	McG	**FTRY-4.00**
FCYR 4 1/2	McG	**FTRY-4.50**
FCYR 5	McG	**FTRY-5.00**
FCYR 6	McG	**FTRY-6.00**
FFLR-1-1/2-4	Osb	**FFTR-1.50**
FFLR-2-1/2-4	Osb	**FFTR-2.50**
FFLR-2-4	Osb	**FFTR-2.00**

Industry Cross Reference		PCT
FFLR-3-4	Osb	**FFTR-3.00**
FLR-1	Osb	**FTR-1.00**
FLR-1-1/8	Osb	**FTR-1.125**
FLR-1-1/4	Osb	**FTR-1.25**
FLR-1-3/8	Osb	**FTR-1.375**
FLR-1-1/2	Osb	**FTR-1.50**
FLR-1-1/2-2	Osb	**FTR-1.50-2**
FLR-1-3/4	Osb	**FTR-1.75**
FLR-2	Osb	**FTR-2.00**
FLR-2-1/4	Osb	**FTR-2.25**
FLR-2-1/2	Osb	**FTR-2.50**
FLR-2-1/2-1	Osb	**FTR-2.50E**
FLR-2-3/4	Osb	**FTR-2.75**
FLR-3	Osb	**FTR-3.00**
FLR-3-1/4	Osb	**FTR-3.25**
FLR-3-1/2	Osb	**FTR-3.50**
FLR-4	Osb	**FTR-4.00**
FLR-4-1/2	Osb	**FTR-4.50**
FLR-5	Osb	**FTR-5.00**
FLR-6	Osb	**FTR-6.00**
FLR-7	Osb	**FTR-7.00**
FLR-8	Osb	**FTR-8.00**
FLRC-2-1/2	Osb	**CIR-3.00-1**
FLRC-3	Osb	**CIR-4.00-1**
FLRC-4	Osb	**CIR-5.00E-1**
FLRCE-2-1/2	Osb	**CIRE-3.00-1**
FLRCE-3	Osb	**CIRE-4.00-1**
FLRCE-4	Osb	**CIRE-5.00E-1**
FLRE-1	Osb	**FTRE-1.00**
FLRE-1-1/8	Osb	**FTRE-1.125**
FLRE-1-1/4	Osb	**FTRE-1.25**
FLRE-1-3/8	Osb	**FTRE-1.375**
FLRE-1-1/2	Osb	**FTRE-1.50**
FLRE-1-3/4	Osb	**FTRE-1.75**
FLRE-2	Osb	**FTRE-2.00**
FLRE-2-1/4	Osb	**FTRE-2.25**
FLRE-2-1/2	Osb	**FTRE-2.50**
FLRE-2-1/2-4	Osb	**FTRE-2.50E**
FLRE-2-3/4	Osb	**FTRE-2.75**
FLRE-3	Osb	**FTRE-3.00**
FLRE-3-1/4	Osb	**FTRE-3.25**
FLRE-3-1/2	Osb	**FTRE-3.50**
FLRE-4	Osb	**FTRE-4.00**
FLRE-4-1/2	Osb	**FTRE-4.50**
FLRE-5	Osb	**FTRE-5.00**
FLRE-6	Osb	**FTRE-6.00**
FLRH-1	Osb	**FTR-1.00-HT**
FLRH-1-1/4	Osb	**FTR-1.25-HT**
FLRH-1-1/2	Osb	**FTR-1.50-HT**
FLRH-2	Osb	**FTR-2.00-HT**
FLRH-2-1/2	Osb	**FTR-2.50-HT**
FLRY-1-1/2	Osb	**FTRY-1.50**
FLRY-1-3/4	Osb	**FTRY-1.75**
FLRY-2	Osb	**FTRY-2.00**
FLRY-2-1/4	Osb	**FTRY-2.25**
FLRY-2-1/2	Osb	**FTRY-2.50E**
FLRY-2-1/2-7	Osb	**FTRY-2.50**
FLRY-2-3/4-7	Osb	**FTRY-2.75**
FLRY-3	Osb	**FTRY-3.00**
FLRY-3-1/4	Osb	**FTRY-3.25**
FLRY-3-1/2	Osb	**FTRY-3.50**
FLRY-4	Osb	**FTRY-4.00**
FLRY-5	Osb	**FTRY-5.00**

Industry Cross Reference		PCT
FLRY-6	Osb	**FTRY-6.00**
FLRY-7	Osb	**FTRY-7.00**
FLRY-8	Osb	**FTRY-8.00**
FLRY-9	Osb	**FTRY-9.00**
FLRY-10	Osb	**FTRY-10.00**
H64L	RBC	**HCF-2.00-S**
H64LW	RBC	**HCF-2.00-SH**
H72L	RBC	**HCF-2.25-S**
H72LW	RBC	**HCF-2.25-SH**
H80L	RBC	**HCF-2.50-S**
H80LW	RBC	**HCF-2.50-SH**
H88L	RBC	**HCF-2.75-S**
H88LW	RBC	**HCF-2.75-SH**
H96L	RBC	**HCF-3.00-S**
H96LW	RBC	**HCF-3.00-SH**
H104L	RBC	**HCF-3.25-S**
H104LW	RBC	**HCF-3.25-SH**
H112L	RBC	**HCF-3.50-S**
H112LW	RBC	**HCF-3.50-SH**
H128L	RBC	**HCF-4.00-S**
H128LW	RBC	**HCF-4.00-SH**
H160LW	RBC	**HCF-5.00-SH**
H192LW	RBC	**HCF-6.00-SH**
H224LW	RBC	**HCF-7.00-SH**
HPC-26	Osb	**MPTR-26**
HPC-30	Osb	**MPTR-30**
HPC-32	Osb	**MPTR-32**
HPC-35	Osb	**MPTR-35**
HPC-40	Osb	**MPTR-40**
HPC-40-1	Osb	**MPTR-40-1**
HPC-47	Osb	**MPTR-47**
HPC-50	Osb	**MPTR-50**
HPC-52	Osb	**MPTR-52**
HPC-62	Osb	**MPTR-62**
HPC-62-1	Osb	**MPTR-62-1**
HPC-72	Osb	**MPTR-72**
HPC-76	Osb	**MPTR-76**
HPC-80	Osb	**MPTR-80**
HPC-85	Osb	**MPTR-85**
HPC-90	Osb	**MPTR-90**
HPC-100	Osb	**MPTR-100**
HPC-100-1	Osb	**MPTR-100-1**
HPC-125	Osb	**MPTR-125**
HPC-150	Osb	**MPTR-150**
HPC-200	Osb	**MPTR-200**
HPCA-40	Osb	**MPTRY-40**
HPCA-50	Osb	**MPTRY-50**
HPCA-62	Osb	**MPTRY-62**
HPCA-62-2	Osb	**MPTRY-62-1**
HPCA-76	Osb	**MPTRY-76**
HPCA-80	Osb	**MPTRY-80**
HPCA-85	Osb	**MPTRY-85**
HPCA-90	Osb	**MPTRY-90**
HPCA-100	Osb	**MPTRY-100**
HPCA-125	Osb	**MPTRY-125**
HPCA-150	Osb	**MPTRY-150**
HPCA-200	Osb	**MPTRY-200**
HPCA-250	Osb	**MPTRY-250**
HPCE-26	Osb	**MPTRE-26**
HPCE-30	Osb	**MPTRE-30**
HPCE-32	Osb	**MPTRE-32**
HPCE-35	Osb	**MPTRE-35**
HPCE-40-1	Osb	**MPTRE-40-1**

Cross Reference Charts

In Alphabetical Order by Reference Number

(989)358-6148
www.pcimfg.com

Industry Cross Reference		PCT
HPCE-47	Osb	**MPTRE-47**
HPCE-50	Osb	**MPTRE-50**
HPCE-52	Osb	**MPTRE-52**
HPCE-62	Osb	**MPTRE-62**
HPCE-62-1	Osb	**MPTRE-62-1**
HPCE-72	Osb	**MPTRE-72**
HPCE-76-1	Osb	**MPTRE-76-1**
HPCE-80	Osb	**MPTRE-80**
HPCE-85	Osb	**MPTRE-85**
HPCE-90	Osb	**MPTRE-90**
HPCE-100	Osb	**MPTRE-100**
HPCE-125	Osb	**MPTRE-125**
HPCE-150	Osb	**MPTRE-150**
HPJ-26	Osb	**MFTR-26**
HPJ-30	Osb	**MFTR-30**
HPJ-32	Osb	**MFTR-32**
HPJ-35	Osb	**MFTR-35**
HPJ-40	Osb	**MFTR-40**
HPJ-40-1	Osb	**MFTR-40-1**
HPJ-47	Osb	**MFTR-47**
HPJ-50	Osb	**MFTR-50**
HPJ-52	Osb	**MFTR-52**
HPJ-62	Osb	**MFTR-62**
HPJ-62-2	Osb	**MFTR-62-1**
HPJ-72	Osb	**MFTR-72**
HPJ-76	Osb	**MFTR-76**
HPJ-80	Osb	**MFTR-80**
HPJ-85	Osb	**MFTR-85**
HPJ-90	Osb	**MFTR-90**
HPJ-100	Osb	**MFTR-100**
HPJ-100-1	Osb	**MFTR-100-1**
HPJ-125	Osb	**MFTR-125**
HPJ-150	Osb	**MFTR-150**
HPJ-200	Osb	**MFTR-200**
HPJA-40	Osb	**MFTRY-40**
HPJA-50	Osb	**MFTRY-50**
HPJA-62	Osb	**MFTRY-62**
HPJA-62-2	Osb	**MFTRY-62-1**
HPJA-76	Osb	**MFTRY-76**
HPJA-80	Osb	**MFTRY-80**
HPJA-85	Osb	**MFTRY-85**
HPJA-90	Osb	**MFTRY-90**
HPJA-100	Osb	**MFTRY-100**
HPJA-125	Osb	**MFTRY-125**
HPJA-150	Osb	**MFTRY-150**
HPJA-200	Osb	**MFTRY-200**
HPJA-250	Osb	**MFTRY-250**
HPJE-26	Osb	**MFTRE-26**
HPJE-30	Osb	**MFTRE-30**
HPJE-32	Osb	**MFTRE-32**
HPJE-35	Osb	**MFTRE-35**
HPJE-40-1	Osb	**MFTRE-40-1**
HPJE-50	Osb	**MFTRE-50**
HPJE-52	Osb	**MFTRE-52**
HPJE-62-1	Osb	**MFTRE-62-1**
HPJE-76	Osb	**MFTRE-76**
HPJE-90	Osb	**MFTRE-90**
HPJE-100	Osb	**MFTRE-100**
HPJE-125	Osb	**MFTRE-125**
HPJE-150	Osb	**MFTRE-150**
HPV-26	Osb	**MVTR-26**
HPV-32	Osb	**MVTR-32**
HPV-40	Osb	**MVTR-40**

Industry Cross Reference		PCT
HPV-62	Osb	**MVTR-62**
HPV-62-1	Osb	**MVTR-62-1**
HPV-76	Osb	**MVTR-76**
HPV-100	Osb	**MVTR-100**
HPV-100-1	Osb	**MVTR-100-1**
HPV-125	Osb	**MVTR-125**
HPVA-40	Osb	**MVTRY-40**
HPVA-50	Osb	**MVTRY-50**
HPVA-62	Osb	**MVTRY-62**
HPVA-62-2	Osb	**MVTRY-62-1**
HPVA-76	Osb	**MVTRY-76**
HPVA-100	Osb	**MVTRY-100**
HPVA-125	Osb	**MVTRY-125**
HPVA-150	Osb	**MVTRY-150**
HPVA-200	Osb	**MVTRY-200**
HPVA-250	Osb	**MVTRY-250**
HPVE-26	Osb	**MVTRE-26**
HPVE-32	Osb	**MVTRE-32**
HPVE-40	Osb	**MVTRE-40**
HPVE-62	Osb	**MVTRE-62**
HPVE-62-1	Osb	**MVTRE-62-1**
HPVE-76	Osb	**MVTRE-76**
HPVE-100	Osb	**MVTRE-100**
HPVE-125	Osb	**MVTRE-125**
MSHA-10	Osb	**MYSH-10**
MSHA-15	Osb	**MYSH-15**
MSHA-20	Osb	**MYSH-20**
MSHA-25	Osb	**MYSH-25**
MSHA-30	Osb	**MYSH-30**
MSHA-45	Osb	**MYSH-45**
MSHA-55	Osb	**MYSH-55**
MSHA-70	Osb	**MYSH-70**
NCF-2SB	Osb	**SCF-2.00-SH**
NCF-2-1/2SB	Osb	**SCF-2.50-SH**
NCF-3SB	Osb	**SCF-3.00-SH**
NCFE-2SB	Osb	**SCFE-2.00-SH**
NCFE-2-1/2SB	Osb	**SCFE-2.50-SH**
NCFE-3SB	Osb	**SCFE-3.00-SH**
NCFY-2S	Osb	**YCF-2.00-S**
NCFY-2-1/4S	Osb	**YCF-2.25-S**
NCFY-2-1/2S	Osb	**YCF-2.50-S**
NCFY-3S	Osb	**YCF-3.00-S**
NCFY-4S	Osb	**YCF-3.25-S**
PCF-1 1/2	McG	**PTR-1.50**
PCF-1 3/4	McG	**PTR-1.75**
PCF-2	McG	**PTR-2.00**
PCF-2 1/4	McG	**PTR-2.25**
PCF-2 1/2	McG	**PTR-2.50**
PCF-2 3/4	McG	**PTR-2.75**
PCF-3	McG	**PTR-3.00**
PCF-3 1/4	McG	**PTR-3.25**
PCF-3 1/2	McG	**PTR-3.50**
PCF-4	McG	**PTR-4.00**
PCF-4 1/2	McG	**PTR-4.50**
PCF-5	McG	**PTR-5.00**
PCF-6	McG	**PTR-6.00**
PCF-7	McG	**PTR-7.00**
PCF-8	McG	**PTR-8.00**
PCFE-1 1/2	McG	**PTRE-1.50**
PCFE-1 3/4	McG	**PTRE-1.75**
PCFE-2	McG	**PTRE-2.00**
PCFE-2 1/4	McG	**PTRE-2.25**
PCFE-2 1/2	McG	**PTRE-2.50**

Industry Cross Reference		PCT
PCFE-2 3/4	McG	**PTRE-2.75**
PCFE-3	McG	**PTRE-3.00**
PCFE-3 1/4	McG	**PTRE-3.25**
PCFE-3 1/2	McG	**PTRE-3.50**
PCFE-4	McG	**PTRE-4.00**
PCFE-4 1/2	McG	**PTRE-4.50**
PCFE-5	McG	**PTRE-5.00**
PCFE-6	McG	**PTRE-6.00**
PCYR-3	McG	**PTRY-3.00**
PCYR-3 1/2	McG	**PTRY-3.50**
PCYR-4	McG	**PTRY-4.00**
PCYR-4 1/2	McG	**PTRY-4.50**
PCYR-5	McG	**PTRY-5.00**
PCYR-6	McG	**PTRY-6.00**
PLR-1	Osb	**PTR-1.00**
PLR-1-1/8	Osb	**PTR-1.125**
PLR-1-1/4	Osb	**PTR-1.25**
PLR-1-3/8	Osb	**PTR-1.375**
PLR-1-1/2	Osb	**PTR-1.50**
PLR-1-3/4	Osb	**PTR-1.75**
PLR-1-3/4-5	Osb	**PTR-1.75-5**
PLR-2	Osb	**PTR-2.00**
PLR-2-3	Osb	**PTR-2.00-2**
PLR-2-1/4	Osb	**PTR-2.25**
PLR-2-1/2	Osb	**PTR-2.50**
PLR-2-1/2-10	Osb	**PTR-2.50-1**
PLR-2-1/2-16	Osb	**PTR-2.50E**
PLR-2-3/4	Osb	**PTR-2.75**
PLR-3	Osb	**PTR-3.00**
PLR-3-1/4	Osb	**PTR-3.25**
PLR-3-1/2	Osb	**PTR-3.50**
PLR-4	Osb	**PTR-4.00**
PLR-4-1/2	Osb	**PTR-4.50**
PLR-5	Osb	**PTR-5.00**
PLR-6	Osb	**PTR-6.00**
PLR-7	Osb	**PTR-7.00**
PLR-8	Osb	**PTR-8.00**
PLR-10	Osb	**PTR-10.00**
PLR-10-1	Osb	**PTR-10.00-8**
PLRE-1	Osb	**PTRE-1.00**
PLRE-1-1/8	Osb	**PTRE-1.125**
PLRE-1-1/4	Osb	**PTRE-1.25**
PLRE-1-3/8	Osb	**PTRE-1.375**
PLRE-1-1/2	Osb	**PTRE-1.50**
PLRE-1-3/4	Osb	**PTRE-1.75**
PLRE-2	Osb	**PTRE-2.00**
PLRE-2-3	Osb	**PTRE-2.00-2**
PLRE-2-1/4	Osb	**PTRE-2.25**
PLRE-2-1/2	Osb	**PTRE-2.50**
PLRE-2-1/2-7	Osb	**PTRE-2.50E**
PLRE-2-3/4	Osb	**PTRE-2.75**
PLRE-3	Osb	**PTRE-3.00**
PLRE-3-1/4	Osb	**PTRE-3.25**
PLRE-3-1/2	Osb	**PTRE-3.50**
PLRE-4	Osb	**PTRE-4.00**
PLRE-4-1/2	Osb	**PTRE-4.50**
PLRE-5	Osb	**PTRE-5.00**
PLRE-6	Osb	**PTRE-6.00**
PLRH-1	Osb	**PTR-1.00-HT**
PLRH-1-1/4	Osb	**PTR-1.25-HT**
PLRH-1-1/2	Osb	**PTR-1.50-HT**
PLRH-2	Osb	**PTR-2.00-HT**
PLRH-2-1/2	Osb	**PTR-2.50-HT**

Industry Cross Reference		PCT
PLRN-1	Osb	**NPTR-1.00**
PLRN-1-1/4	Osb	**NPTR-1.25**
PLRN-1-1/2	Osb	**NPTR-1.50**
PLRN-2	Osb	**NPTR-2.00**
PLRN-2-1/2	Osb	**NPTR-2.50**
PLRNE-1	Osb	**NPTRE-1.00**
PLRNE-1-1/4	Osb	**NPTRE-1.25**
PLRNE-1-1/2	Osb	**NPTRE-1.50**
PLRNE-2	Osb	**NPTRE-2.00**
PLRNE-2-1/2	Osb	**NPTRE-2.50**
PLRY-1-1/2	Osb	**PTRY-1.50**
PLRY-1-3/4	Osb	**PTRY-1.75**
PLRY-2	Osb	**PTRY-2.00**
PLRY-2-1/4	Osb	**PTRY-2.25**
PLRY-2-1/2	Osb	**PTRY-2.50E**
PLRY-2-1/2-7	Osb	**PTRY-2.50**
PLRY-3	Osb	**PTRY-3.00**
PLRY-3-1/4	Osb	**PTRY-3.25**
PLRY-3-1/2	Osb	**PTRY-3.50**
PLRY-4	Osb	**PTRY-4.00**
PLRY-5	Osb	**PTRY-5.00**
PLRY-6	Osb	**PTRY-6.00**
PLRY-7	Osb	**PTRY-7.00**
PLRY-8	Osb	**PTRY-8.00**
PLRY-9	Osb	**PTRY-9.00**
PLRY-10	Osb	**PTRY-10.00**
RBC 2	RBC	**PDC-2.00**
RBC 2 1/4	RBC	**PDC-2.25**
RBC 2 1/2	RBC	**PDC-2.50**
RBC 2 3/4	RBC	**PDC-2.75**
RBC 3	RBC	**PDC-3.00**
RBC 3 1/4	RBC	**PDC-3.25**
RBC 3 1/2	RBC	**PDC-3.50**
RBC 4	RBC	**PDC-4.00**
RBC 5	RBC	**PDC-5.00**
RBC 6	RBC	**PDC-6.00**
RBC 7	RBC	**PDC-7.00**
RBC 8	RBC	**PDC-8.00**
RBC 9	RBC	**PDC-9.00**
RBC 10	RBC	**PDC-10.00**
RBY 3	RBC	**PDCY-3.00**
RBY 3 1/4	RBC	**PDCY-3.25**
RBY 3 1/2	RBC	**PDCY-3.50**
RBY 4	RBC	**PDCY-4.00**
RBY 5	RBC	**PDCY-5.00**
RBY 6	RBC	**PDCY-6.00**
RBY 7	RBC	**PDCY-7.00**
RBY 8	RBC	**PDCY-8.00**
RBY 9	RBC	**PDCY-9.00**
RBY 10	RBC	**PDCY-10.00**
S64L	RBC	**SCF-2.00-S**
S64LW	RBC	**SCF-2.00-SH**
S64LWX	RBC	**SCFE-2.00-SH**
S72L	RBC	**SCF-2.25-S**
S72LW	RBC	**SCF-2.25-SH**
S72LWX	RBC	**SCFE-2.25-SH**
S80L	RBC	**SCF-2.50-S**
S80LW	RBC	**SCF-2.50-SH**
S80LWX	RBC	**SCFE-2.50-SH**
S88L	RBC	**SCF-2.75-S**
S88LW	RBC	**SCF-2.75-SH**
S88LWX	RBC	**SCFE-2.75-SH**
S96L	RBC	**SCF-3.00-S**

Cross Reference Charts

In Alphabetical Order by Reference Number

(989)358-6148
www.pcimfg.com

Industry Cross Reference		PCT
S96LW	RBC	SCF-3.00-SH
S96LWX	RBC	SCFE-3.00-SH
S104L	RBC	SCF-3.25-S
S104LW	RBC	SCF-3.25-SH
S104LWX	RBC	SCFE-3.25-SH
S112L	RBC	SCF-3.50-S
S112LW	RBC	SCF-3.50-SH
S112LWX	RBC	SCFE-3.50-SH
S128L	RBC	SCF-4.00-S
S128LW	RBC	SCF-4.00-SH
S128LWX	RBC	SCFE-4.00-SH
S160LW	RBC	SCF-5.00-SH
S192LW	RBC	SCF-6.00-SH
S224LW	RBC	SCF-7.00-SH
SHA-437	Osb	YSH-.437
SHA-500	Osb	YSH-.500
SHA-625	Osb	YSH-.625
SHA-750	Osb	YSH-.750
SHA-1000	Osb	YSH-1.000
SHA-1125	Osb	YSH-1.125
SHA-1250	Osb	YSH-1.250
SHA-1750	Osb	YSH-1.750
SHA-2250	Osb	YSH-2.250
SHA-2750	Osb	YSH-2.750
SHB-3250	Osb	YSH-3.250
SHB-3750	Osb	YSH-3.750
SHB-4250	Osb	YSH-4.250
SHE-437	Osb	YSHE-.437
SHE-500	Osb	YSHE-.500
SHE-625	Osb	YSHE-.625
SHE-750	Osb	YSHE-.750
SHE-1000	Osb	YSHE-1.000
SHE-1125	Osb	YSHE-1.125
SHE-1250	Osb	YSHE-1.250
SHE-1750	Osb	YSHE-1.750
SHE-2250	Osb	YSHE-2.250
SHE-2750	Osb	YSHE-2.750
VCF-2-1/2	McG	VTR-2.50
VCF-3-1/2	McG	VTR-3.50
VCF-4-1/2	McG	VTR-4.50
VCF-5-1/2	McG	VTR-5.50
VCF-6-1/2	McG	VTR-6.50
VCF-7-1/2	McG	VTR-7.50
VCF-8-1/2	McG	VTR-8.50
VCFE-2-1/2	McG	VTRE-2.50
VCFE-3-1/2	McG	VTRE-3.50
VCFE-4-1/2	McG	VTRE-4.50
VCFE-5-1/2	McG	VTRE-5.50
VCYR-4 1/2	McG	VTRY-4.50
VCYR-5 1/2	McG	VTRY-5.50
VCYR-6 1/2	McG	VTRY-6.50
VLR-1-1/2	Osb	VTR-1.50
VLR-2	Osb	VTR-2.00
VLR-2-1/2	Osb	VTR-2.50
VLR-3-1/2	Osb	VTR-3.50
VLR-3-1/2-16	Osb	VTR-3.50E
VLR-4-1/2	Osb	VTR-4.50
VLR-5-1/2	Osb	VTR-5.50
VLR-6-1/2	Osb	VTR-6.50
VLR-7-1/2	Osb	VTR-7.50
VLR-8-1/2	Osb	VTR-8.50
VLRE-1-1/2	Osb	VTRE-1.50
VLRE-2	Osb	VTRE-2.00

Industry Cross Reference		PCT
VLRE-2-1/2	Osb	VTRE-2.50
VLRE-3-1/2	Osb	VTRE-3.50
VLRE-3-1/2-4	Osb	VTRE-3.50E
VLRE-4-1/2	Osb	VTRE-4.50
VLRE-5-1/2	Osb	VTRE-5.50
VLRE-6-1/2	Osb	VTRE-6.50
VLRE-7-1/2	Osb	VTRE-7.50
VLRH-1-1/2	Osb	VTR-1.50-HT
VLRH-2	Osb	VTR-2.00-HT
VLRH-2-1/2	Osb	VTR-2.50-HT
VLRY-2-1/2	Osb	VTRY-2.50-9
VLRY-3	Osb	VTRY-3.00
VLRY-3-1/2-7	Osb	VTRY-3.50-9
VLRY-3-3/4	Osb	VTRY-3.75
VLRY-4-1/2	Osb	VTRY-4.50
VLRY-5	Osb	VTRY-5.00
VLRY-5-1/2	Osb	VTRY-5.50
VLRY-6-1/2	Osb	VTRY-6.50
VLRY-7-1/2	Osb	VTRY-7.50
VLRY-8-1/2	Osb	VTRY-8.50
VLRY-9-1/2	Osb	VTRY-9.50
VLRY-10-1/2	Osb	VTRY-10.50
VLRY-11-1/2	Osb	VTRY-11.50
Y64L	RBC	YCF-2.00-S
Y72L	RBC	YCF-2.25-S
Y80L	RBC	YCF-2.50-S
Y88L	RBC	YCF-2.75-S
Y96L	RBC	YCF-3.00-S
Y104L	RBC	YCF-3.25-S
Y112L	RBC	YCF-3.50-S
Y128L	RBC	YCF-4.00-S
Y160L	RBC	YCF-5.00-S
Y192L	RBC	YCF-6.00-S
Y224L	RBC	YCF-7.00-S
YCRS-32	Kyo	YCF-2.00-S
YCRS-36	Kyo	YCF-2.25-S
YCRS-40	Kyo	YCF-2.50-S
YCRS-44	Kyo	YCF-2.75-S
YCRS-48	Kyo	YCF-3.00-S
YCRS-52	Kyo	YCF-3.25-S
YCRS-56	Kyo	YCF-3.50-S
YCRS-64	Kyo	YCF-4.00-S
YCRS-80	Kyo	YCF-5.00-S
YCRS-96	Kyo	YCF-6.00-S
YCRSC-32	Kyo	YCCF-2.00-S
YCRSC-36	Kyo	YCCF-2.25-S
YCRSC-40	Kyo	YCCF-2.50-S
YCRSC-44	Kyo	YCCF-2.75-S
YCRSC-48	Kyo	YCCF-3.00-S
YCRSC-52	Kyo	YCCF-3.25-S
YCRSC-56	Kyo	YCCF-3.50-S
YCRSC-64	Kyo	YCCF-4.00-S
YCRSC-80	Kyo	YCCF-5.00-S
YCRSC-96	Kyo	YCCF-6.00-S