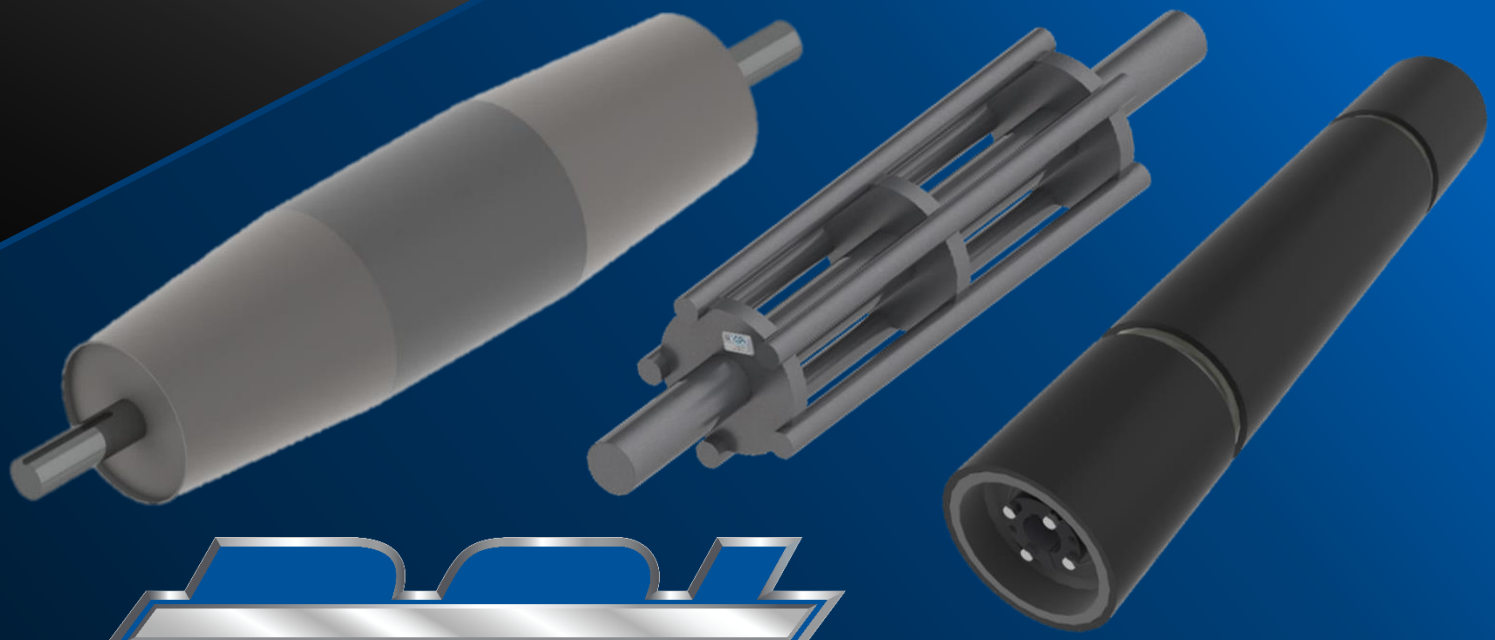

PCI®

Solutions Through Innovation

CONVEYOR PULLEYS

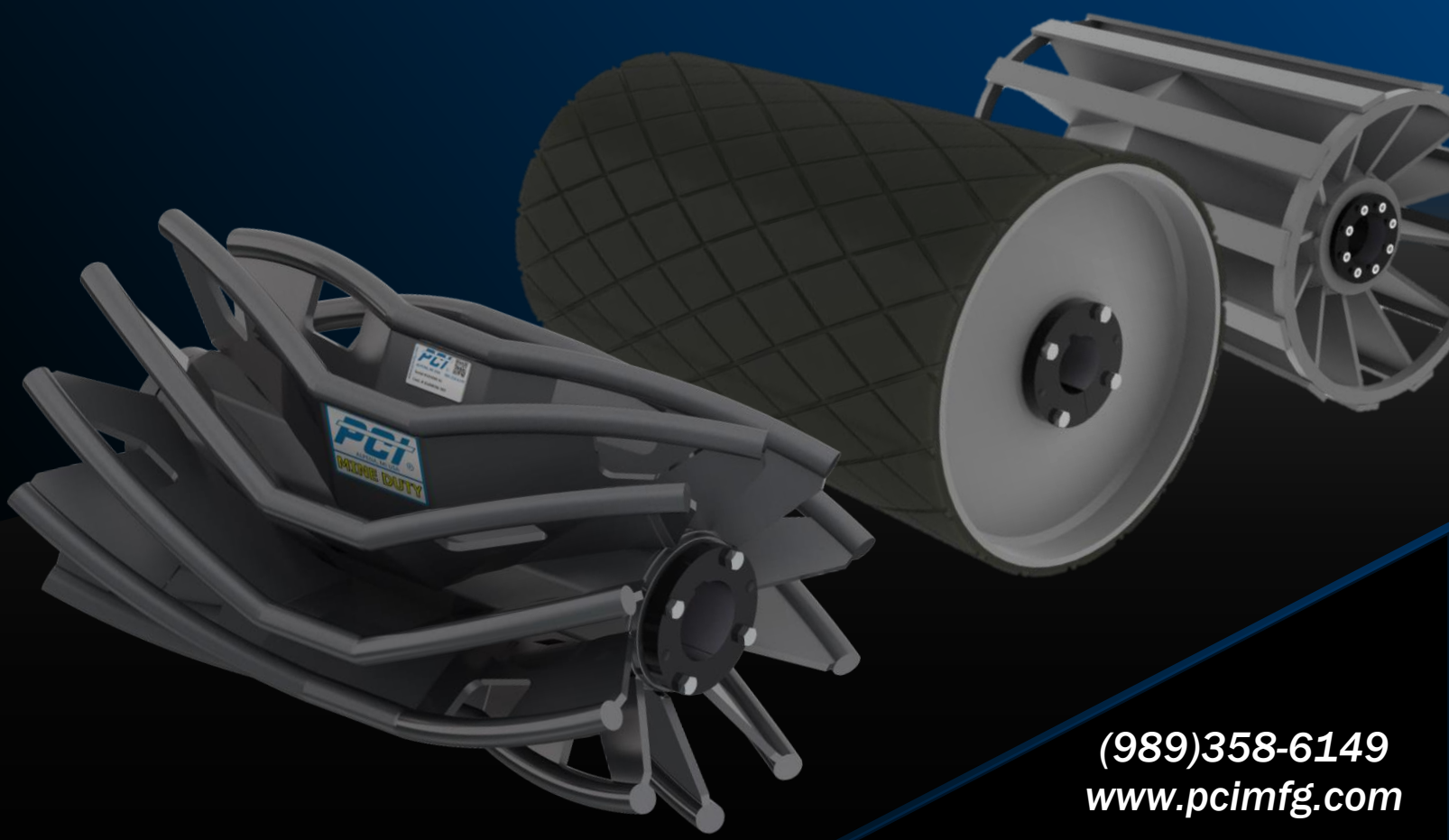

(989)358-6149
www.pcimfg.com

CONVEYOR PULLEYS

Drum Pulleys: Package Handling

FC / MC Series
Diameters: 2" up to 12.75"

FC and MC Series pulleys are manufactured from light to heavy wall tubing or pipe. FC Series pulleys feature PCI's unique Trapezoidal Crown package. PCI's proprietary crowning process provides the consistency, performance, and dependability of a Trapezoidal Crown profile in an economic gauge wall construction. FC and MC Series pulleys are available in multiple hub configurations, lagging styles and surface finish options.

Drum Pulleys: Bulk Handling

Heavy / Mine Duty
Diameters: up to 60"

PCI® Heavy Duty and Mine Duty drum conveyor pulleys are designed to meet or exceed CEMA construction standards for belt conveyor applications where bulk goods are being conveyed. PCI Heavy & Mine Duty drum pulleys feature PCI's Contoured Integral End Disks, which maximize pulley life by reducing the risk of failure from end disk fatigue.

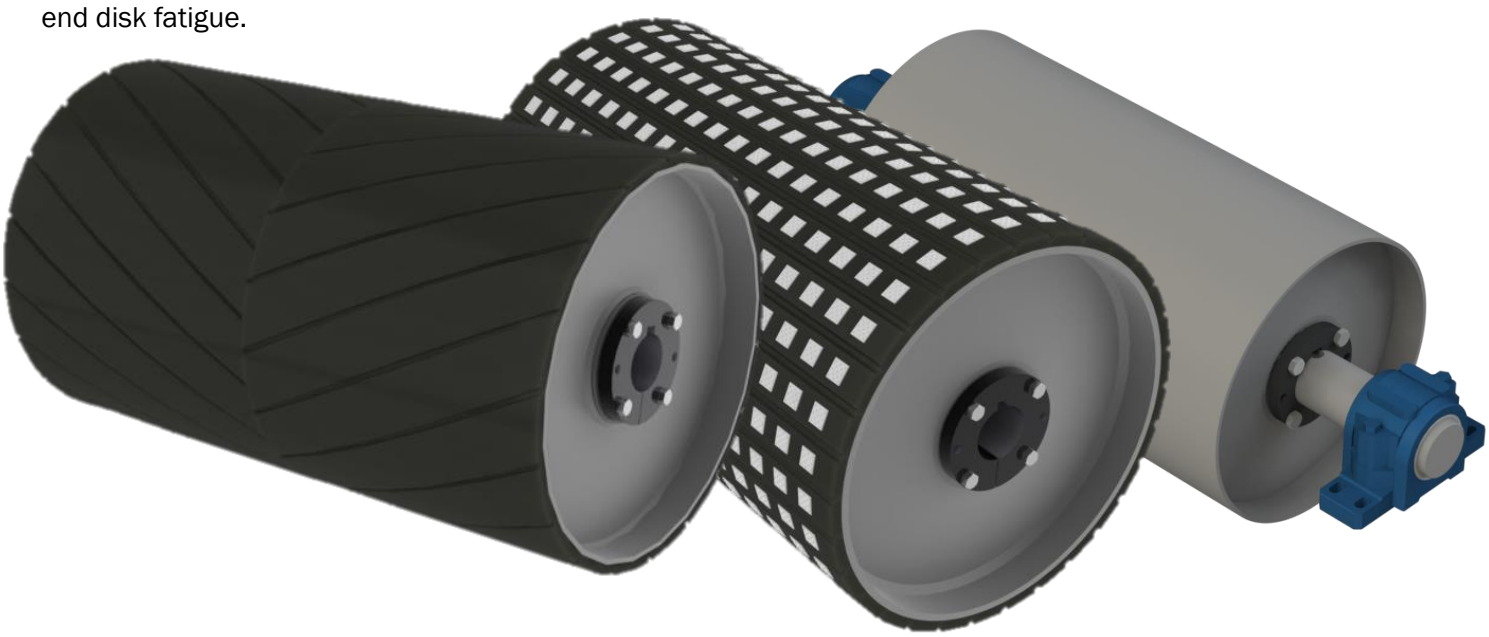

CONVEYOR PULLEYS

Solutions Through Innovation

Wing Pulleys: Self Cleaning

Heavy / Mine Duty
Diameters: up to 52”

With over a dozen unique wing pulley configurations ranging from 4” to 52” diameter, PCI has North America’s largest selection of true self-cleaning pulley solutions. PCI’s patented technologies are field proven to maximize component life and increase performance in the most demanding applications.

Stainless Steel Conveyor Pulleys

Drum / Wing Series
Diameters: up to 60”

Selection of appropriate components plays a critical role in achieving ultimate success in conveyor design. Without the use of proper tools and training, this selection process can be cumbersome and time consuming for environments requiring stainless steel materials. To help simplify your selection process, PCI has developed four distinct classes of stainless steel conveyor pulleys that are designed to meet the requirements of a variety of applications. Our unique approach to stainless steel conveyor pulley design provides you with *stainless steel selection and solutions simplified.*

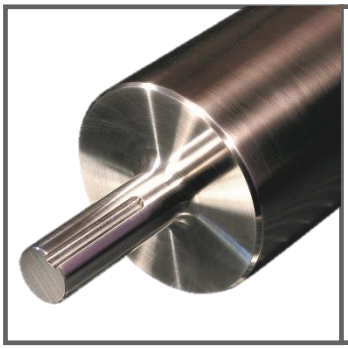

SANITARY CLASS

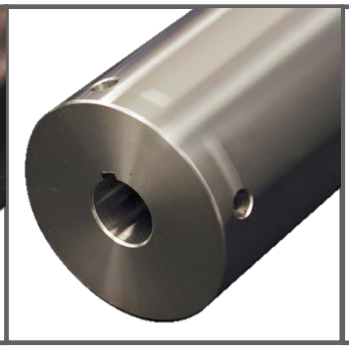

SUPER-CLEAN

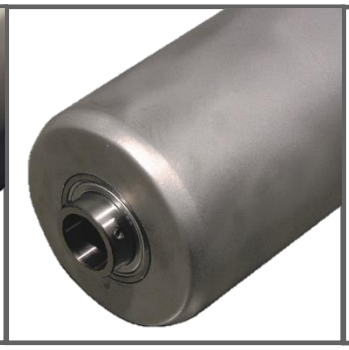

EASY-CLEAN

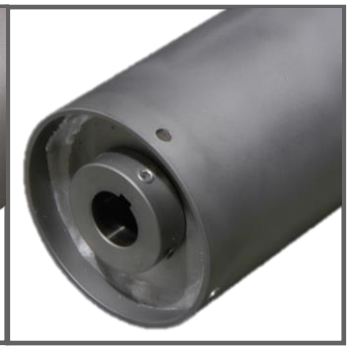

EXTRA-VALUE

CONVEYOR PULLEYS

Hub Styles

PLAIN BORE (WELDED SHAFT) (TYPE 1/TYPE A)

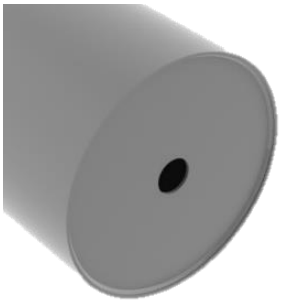

End disks are bored to allow for a customer welded through shaft.

WELDED THROUGH SHAFT (TYPE 1/TYPE A)

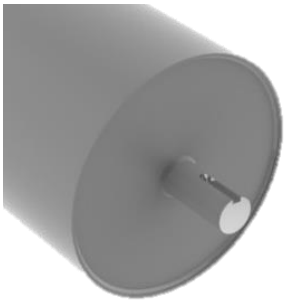

A singular shaft extends through the entire pulley and is welded at both end disks.

WELDED STUB SHAFT

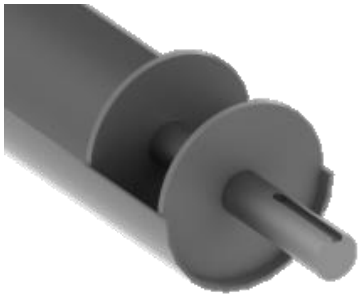

An assembly consisting of a short length of shaft and two disks is welded into each end of the pulley.

KEYED HUBS & SET SCREWS (TYPE 2/TYPE B/TYPE D)

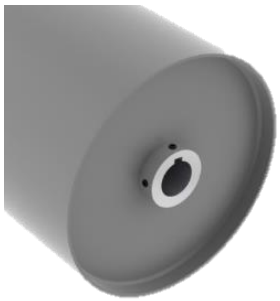

Removable shaft extends thru the pulley, is held in place with set screws and driven by a keyway.

ER STYLE INTERNAL BEARINGS (TYPE 3/TYPE C)

End disks are fitted with bearing units to allow rotation of the pulley around the shaft.

WELDED COMPRESSION STYLE HUBS & BUSHINGS (TYPE 4)

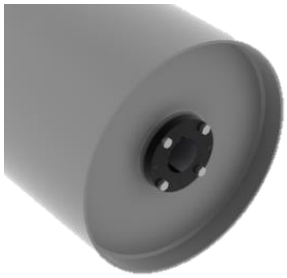

A compression style hub is welded to the end disk and a through shaft is affixed by use of a tapered bushing. XT®, QD® and Taper-Lock® styles are readily available.

KEYLESS LOCKING DEVICES (TYPE 5)

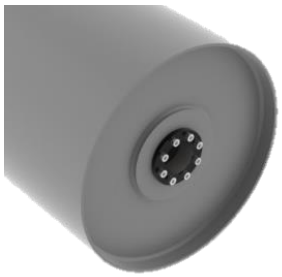

Hubs are welded and machined to accept a mechanical shrink fit style hub and through shaft. Several manufacturers & brands are available.

CONTOURED INTEGRAL END DISKS & HUBS FOR BUSHINGS

A compression hub is machined directly into a profiled end disk in place of a welded style hub.

DEAD SHAFT ASSEMBLY

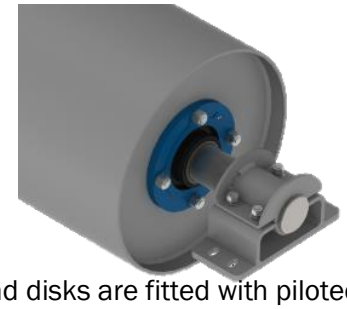

End disks are fitted with piloted flange bearings and the shaft is held by fixed mounting blocks designed to easily replace external pillow block bearings.

DRUM PULLEYS

Built to Last, Built to Perform

PCI has been manufacturing conveyor pulleys with quality and reliability at the forefront. Our Drum Pulleys are designed with selective weight distribution to ensure that you receive the optimum value for your purchase. This means you're getting the right amount of strength...in the right places.

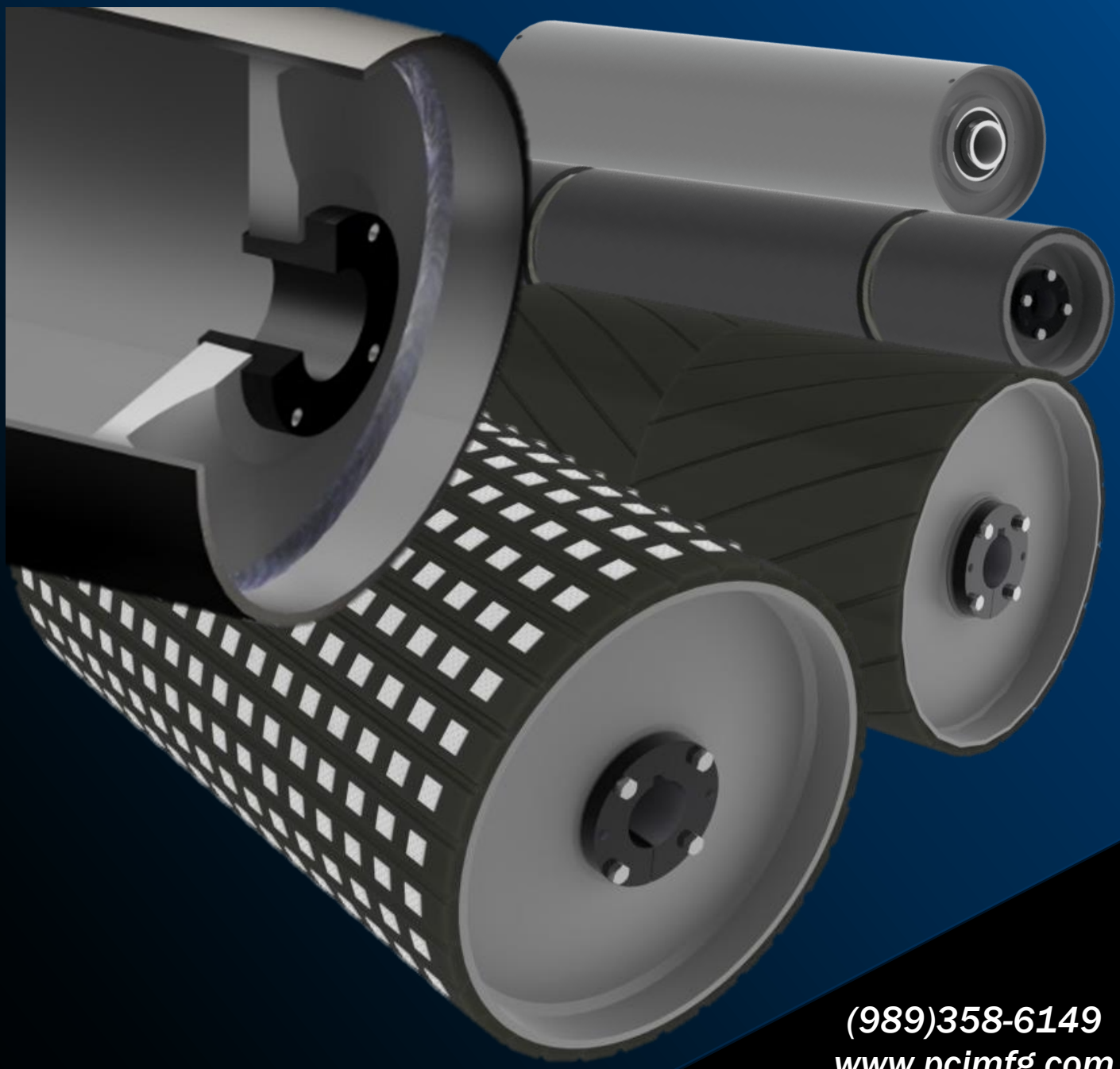

(989)358-6149
www.pcimfg.com

CONVEYOR PULLEYS

Drum Pulleys

Solutions Through Innovation

PACKAGE HANDLING

FC / MC Series
Diameters: 2" up to 12.75"

Drum pulleys are available in FC and MD Series construction. FC Series pulleys are manufactured from gauge wall or light duty tubing and feature PCI's unique Trapezoidal Crown package. PCI's proprietary crowning process provides the consistency, performance, and dependability of a Trapezoidal Crown profile in an economic gauge wall construction. MC Series drum pulleys are manufactured from medium or heavy wall tube or pipe and receive a machined crown when a crown is specified.

BULK HANDLING

Heavy / Mine Duty
Diameters: up to 60"

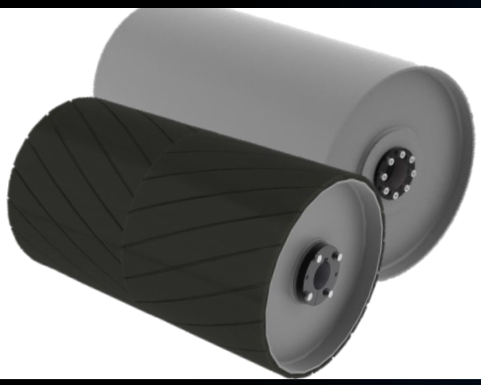

PCI® Heavy Duty and Mine Duty drum conveyor pulleys are designed to meet or exceed CEMA construction standards for belt conveyor applications where bulk goods are being conveyed. PCI Heavy & Mine Duty drum pulleys feature PCI's Contoured Integral End Disks, which maximize pulley life by reducing the risk of failure from end disk fatigue.

ICE-ERADICATOR®

Patent #11572234
Diameters: up to 60"

PCI's Ice-Eradicator® is the world's first proven solution to temper the costly effects of frozen conveyor belts. A drum style Ice-Eradicator® head pulley de-ices and softens conveyor belts encouraging startup in freezing conditions.

WATCH THE VIDEO

STAINLESS STEEL OPTIONS

Pre-engineered Classes
Or Build Your Own Class "X"

PCI has developed distinct classes of pre-engineered stainless steel conveyor pulleys that are designed to meet the requirements of a variety of applications. We also provide custom designed Class X pulleys to meet individualized needs. Our unique approach to stainless steel conveyor pulley design provides you with *stainless steel selection simplified and solutions through innovation.*

CONVEYOR PULLEYS

Drum Pulleys – Package Handling

FC & MC Series

Solutions Through Innovation

Drum pulleys from 2” to 12” in diameter are available in FC and MD Series construction. FC Series pulleys are manufactured from gauge wall or light duty tubing and feature PCI’s unique Trapezoidal Crown package. PCI’s proprietary crowning process provides the consistency, performance, and dependability of a Trapezoidal Crown profile in an economic gauge wall construction. MC Series drum pulleys are manufactured from medium or heavy wall tube or pipe and receive a machined crown when a crown is specified.

FEATURING...

PCI Trapezoidal Crown Technology

SURFACE OPTIONS INCLUDE... MACHINING, LAGGING & KNURLING

DIAMETERS AVAILABLE

2” through 12.75”

WALL THICKNESSES

FC: 11 gauge (.120”), 10 gauge (.134”), 3/16”
MC: Multiple Options 1/4” through 3/8”

END DISK THICKNESSES

1/4” – 5/16” – 3/8” – 1/2"

HUB STYLES AVAILABLE

Plain Bore or Welded Shaft *(Type 1/Type A)*
Keyed Hubs *(Type 2/ Type B / Type D)*
Internal Bearings *(Type 3 / Type C)*
Welded Compression Hubs/Bushings *(Type 4)*
Contoured Integral End Disks/Bushings
Keyless Locking Devices *(Type 5)*
Welded Stub Shaft
Dead Shaft Assembly

Hub style availability will vary based on pulley construction.

CONVEYOR PULLEYS
Focus Flyer
FC Trapezoidal Crown

Drum pulleys from 2” to 12” in diameter are available in FC Series construction. FC Series pulleys are manufactured from gauge wall or light duty tubing and feature PCI’s unique Trapezoidal Crown package. PCI’s proprietary crowning process provides the consistency, performance, and dependability of a Trapezoidal Crown profile in an economic gauge wall construction.

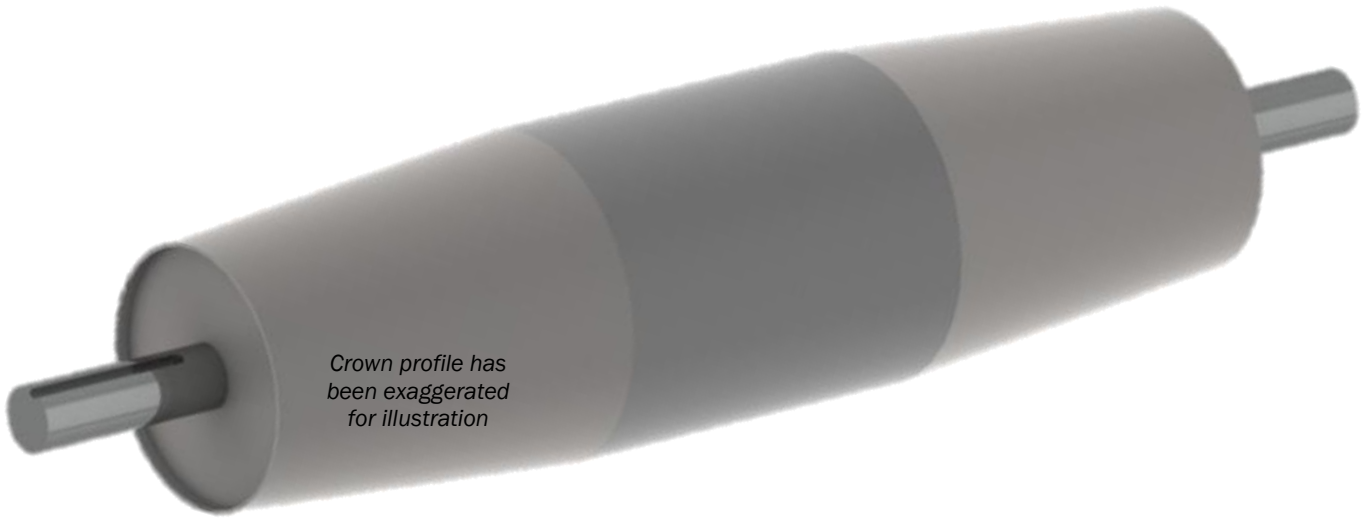

INCREASED BELT LIFE: PCI Trapezoidal Crown pulleys lengthen conveyor belt life by minimizing center stretch commonly associated with single crown profiles. Because of its many performance-enhancing features, the “trap crown” profile is the preferred crown of many conveyor belt manufacturers.

ENHANCED BELT TRACKING: A conveyor belt will track towards the high point or largest diameter of a conveyor pulley. Trapezoidal crown pulleys are flat in the center and have tapers on each end providing an even, center located plateau for the conveyor belt to track around.

IMPROVED RUNOUT: PCI’s proprietary crowning process provides improved runout characteristics over alternate methods of forming a crown in gauge wall tubing. Improved runout provides more consistent performance, reducing maintenance costs associated with belt tracking and belt replacement.

PRODUCTION RUN CONSISTENCY: PCI’s proprietary crowning process also provides consistency between production runs. This means that by purchasing a PCI conveyor pulley, you will receive the same quality product with every purchase.

ECONOMICAL CONSTRUCTION: Most manufacturers can provide the advantages of a trapezoidal crown by machining it into the face of a heavy wall pulley. By forming the trapezoidal crown into the face of the pulley, our FC Series pulley eliminates the cost of machining and excess material, giving you maximum performance at an optimum value.

CONVEYOR PULLEYS
Focus Flyer
Welded Stub Shaft

PCI® Welded Stub Shaft pulleys are designed to maximize conveyor pulley life by reducing the risk of failure from shaft deflection by increasing fatigue safety factor and overall shaft capacity. PCI's design utilizes either a tandem of disks with shorter shafts or a solid shaft that is turned to specifications. Welded stub shaft designs are optimal for longer length pulleys of smaller diameters.

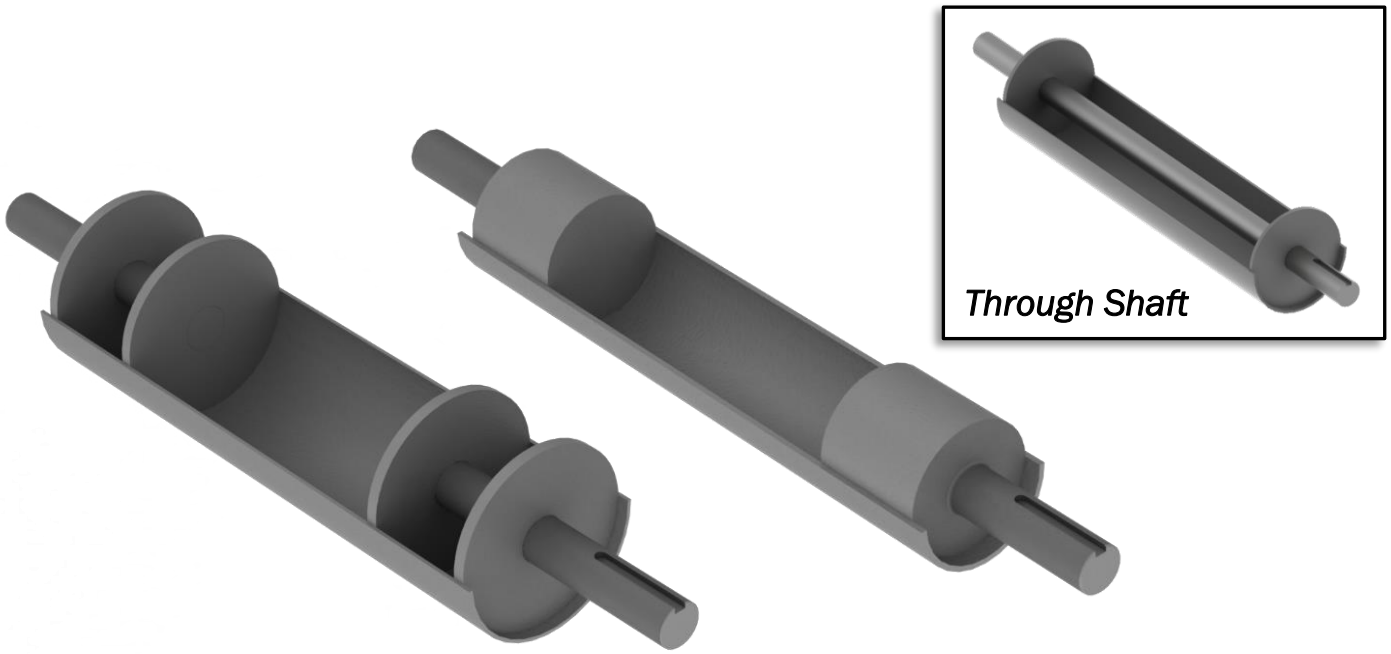

DESIGN BENEFITS

Minimized Shaft Deflection - Increased Shaft Capacity

Minimized Shaft Deflection: The single largest contributor to premature failure of a conveyor pulley is end disk fatigue caused by excessive shaft deflection. Shaft deflection is the bending or flexing of a shaft caused by the sum of the loads on the pulley. Pulleys of longer length (typically greater than 72") require special consideration of deflection because of their length. PCI stub shaft pulleys eliminate deflection by replacing a through shaft with two shorter shaft designs.

Increased Shaft Capacity: By eliminating shaft deflection as a source of failure, PCI stub shaft pulleys provide increased capacity for the pulley assembly. Depending on the specifications of the pulley, a PCI stub shaft pulley can provide up to 10 times the capacity of a comparable through shaft design.

CONVEYOR PULLEYS

Drum Pulleys – Bulk Handling
Heavy / Mine Duty

PCI® Heavy Duty and Mine Duty drum conveyor pulleys are designed to meet or exceed CEMA construction standards for belt conveyor applications where bulk goods are being conveyed. PCI Heavy & Mine Duty drum pulleys feature PCI's Contoured Integral End Disks, which maximize pulley life by reducing the risk of failure from end disk fatigue

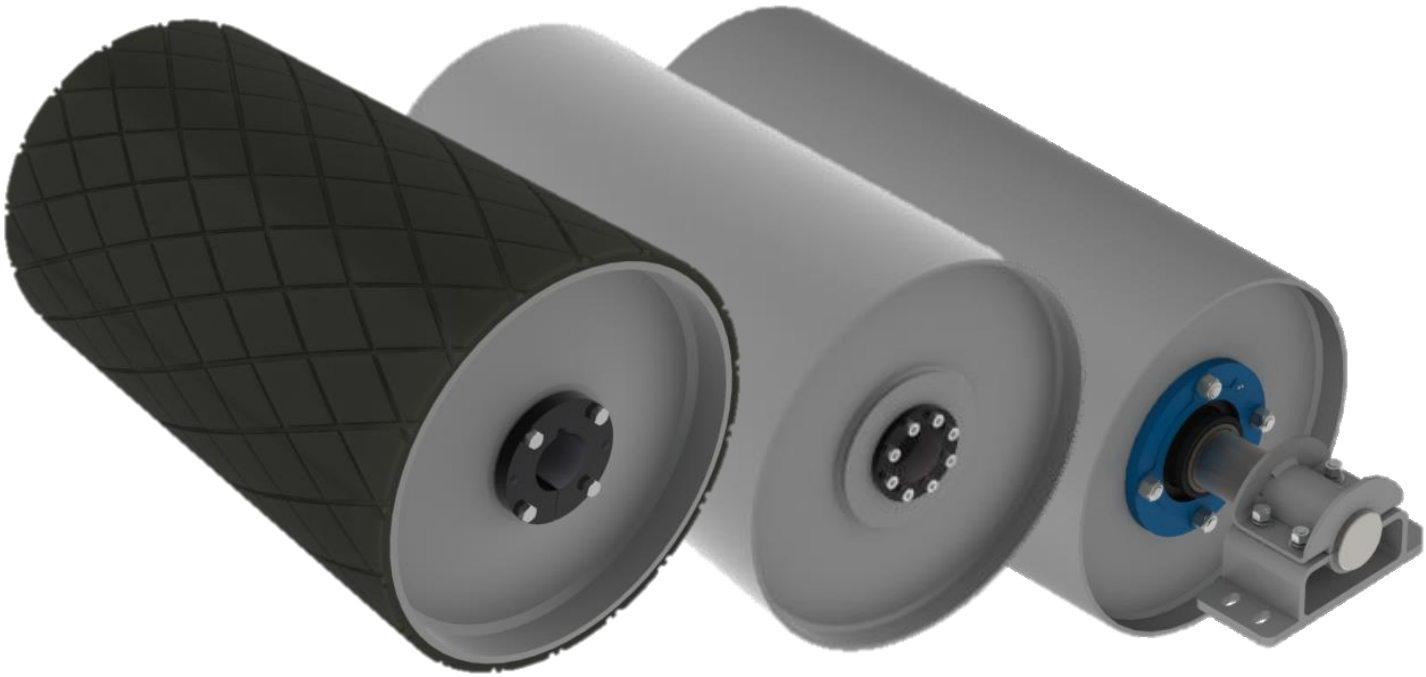

HEAVY DUTY

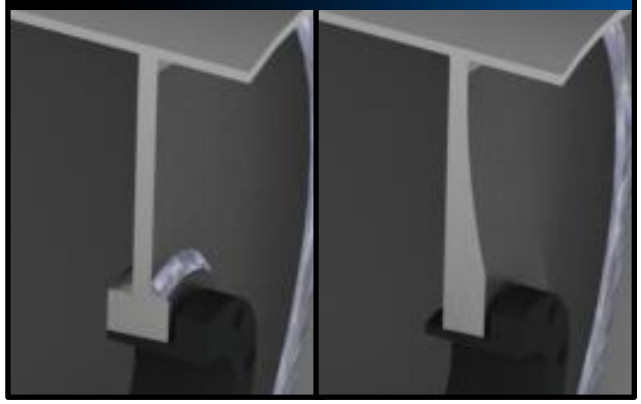

MINE DUTY

DIAMETERS AVAILABLE

Standards up to 60"

HUB STYLES AVAILABLE

*Plain Bore or Welded Shaft *(Type 1/Type A)*
*Keyed Hubs *(Type 2/Type B/Type D)*
Welded Compression Hubs/Bushings *(Type 4)*
Contoured Integral End Disks/Bushings
Keyless Locking Devices
Dead Shaft Assembly
**Available in Heavy Duty Only*

Hub style availability will vary based on pulley construction.

CONVEYOR PULLEYS

Focus Flyer

Contoured Integral End Disks

PCI® Contoured Integral End Disks are designed to maximize conveyor pulley life by reducing the risk of failure from end disk fatigue. PCI's design eliminates the need for a hub-to-disk weld by machining a hub directly into the surface of the end disk. In addition, PCI's special contour optimizes the surface stress of the end disk by allowing for adequate flexibility not provided by flat disk designs.

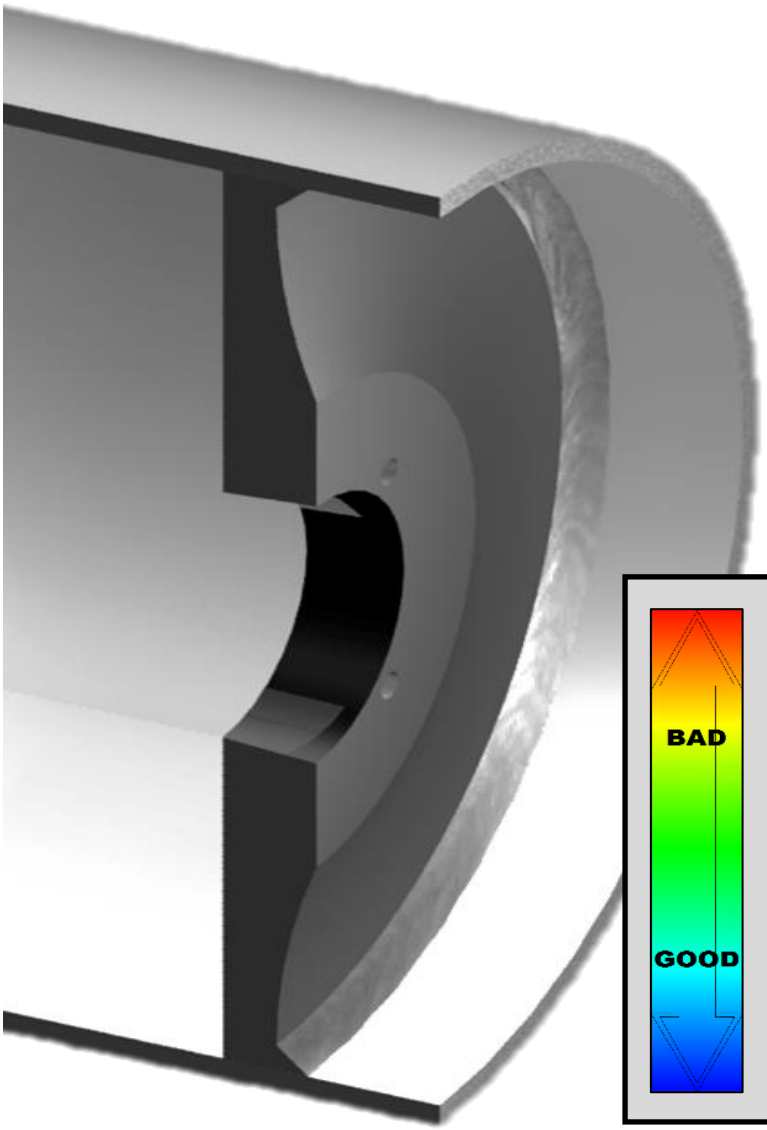

DESIGN BENEFITS

Even Distribution of Stress

Improved Bore Alignment

Eliminates Weld Stresses

Optimized Flexibility

FAILURE FREE SINCE 2011

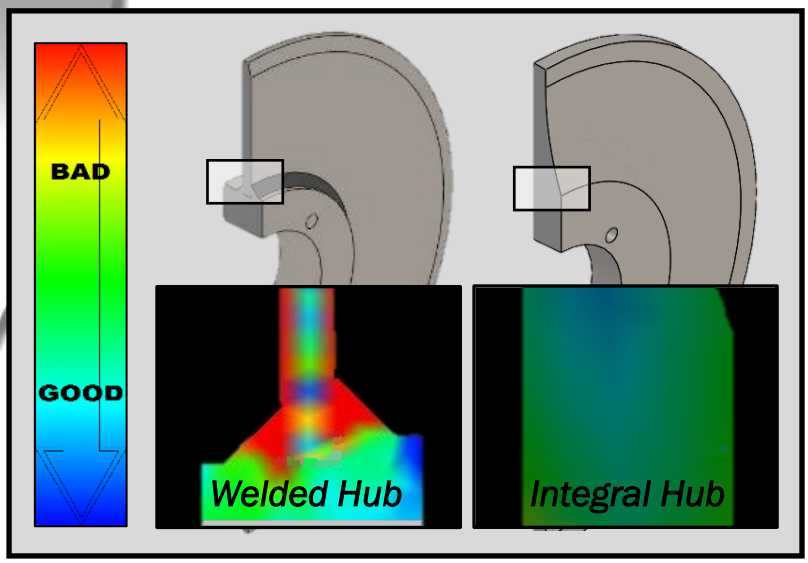

Machined Integral Hub: The leading cause of premature pulley failure is end disk fatigue. End disk fatigue causes a pulley to fail at the weakest point on the end disk, the area near the weld between the hub and disk. The sudden change in geometry between the flat disk and the cylindrical hub produces an area of increased stress concentration. Additionally, welding also distorts the end disk causing hub bores to misalign from end to end. An integral style hub machined directly into the end disk eliminates the need for a weld between a hub and disk, thereby greatly reducing the risk of premature pulley failure.

Contoured Profile: Flat end disk designs discourage proper flexing of the end disk, thereby increasing the amount of stress induced in vulnerable areas. PCI's contoured profile allows for adequate flexibility under load by increasing thickness where it benefits load accommodation and decreasing thickness where the disk should be allowed to flex.

SELF-CLEANING WING PULLEYS

Built to Last, Built to Perform

With over a dozen unique wing pulley configurations ranging from 4” to 60” diameter, PCI has North America’s largest selection of true self-cleaning pulley solutions. PCI’s patented technologies are field proven to maximize component life and increase performance in the most demanding applications.

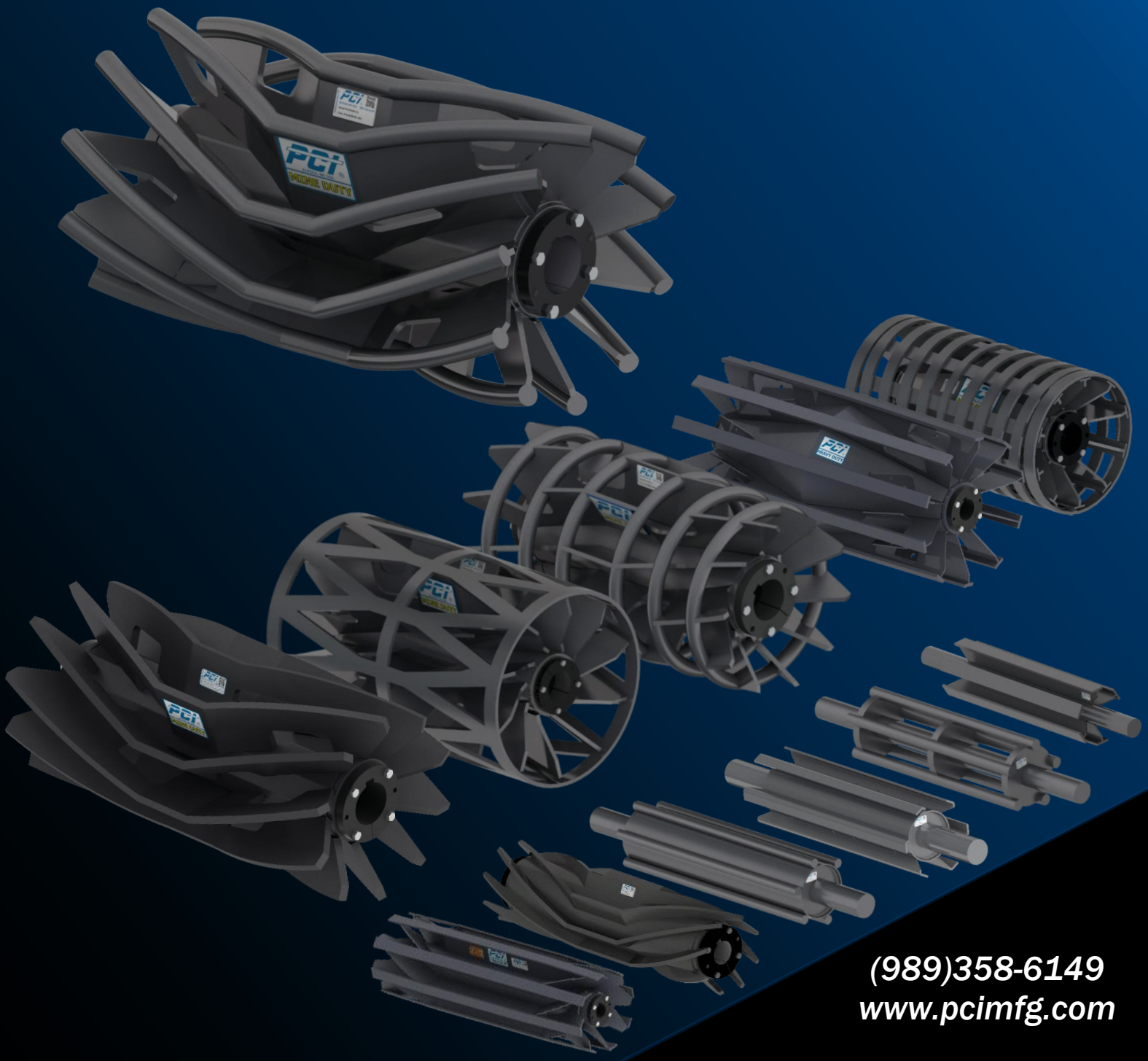

(989)358-6149
www.pcimfg.com

CONVEYOR PULLEYS

Self-Cleaning Wing Pulleys

Solutions Through Innovation

THE ERADICATOR®

Patent# 8,857,606
Diameters: up to 52”

The Eradicator wing pulley combines the best features of a traditional wing pulley with several unique performance enhancing characteristics to create the optimum self-cleaning solution.

WATCH THE VIDEO

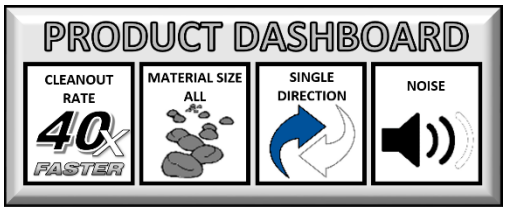

THE ERADICATOR®-MAX

Patent# 8,857,606
Diameters: up to 52”

The Eradicator-MAX wing pulley combines the unmatched cleanout rates of the Eradicator with maximum wear- life and strength at all diameters.

WATCH THE VIDEO

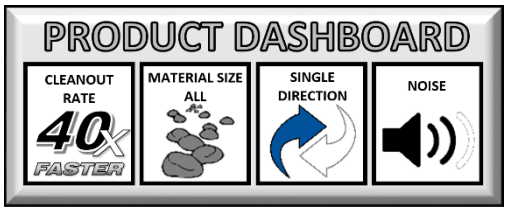

ERADICATOR® D²®

Patent# 8,857,606 and # 10,442,631
Diameters: up to 52”

The Eradicator D² *(Directional Discharge)* incorporates innovative design features of the Eradicator allowing for operation in reversing conveyors. The Eradicator D² directs the flow of material discharge to one side only.

WATCH THE VIDEO

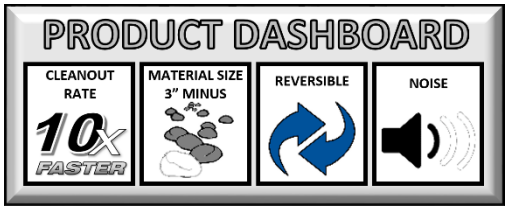

THE ICE-ERADICATOR®

Patent #11572234
Diameters: up to 52”

The Ice-Eradicator is the world’s first proven solution to temper the costly effects of frozen conveyor belts. The Ice-Eradicator wing pulley prevents snow and ice build-up between the wings during operation or shut-down.

WATCH THE VIDEO

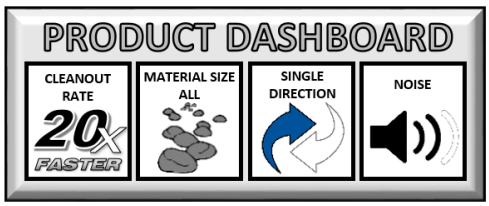

CONVEYOR PULLEYS

Self-Cleaning Wing Pulleys

Solutions Through Innovation

THE DEFLECTOR™

Patent# 8,857,606 and # 10,442,631
Diameters: 14”- 52”

The Deflector™ wing pulley increases the performance of a traditional wing pulley by adding our proven and patented ports with angled deflectors to continuously direct material to the outer edges of the pulley.

WATCH THE VIDEO

PRODUCT DASHBOARD

CLEANOUT RATE	MATERIAL SIZE	REVERSIBLE	NOISE
5X FASTER	ALL		

THE DOMINATOR

Patent# 8,857,606
Heavy Duty Diameters: 8-12”

The patented design of the Dominator™ 8-12” HD Wing Pulley maximizes the material cleanout rate by incorporating the proven design features of The Eradicator® Wing. Self-gusseted angled wings provide reinforcement to prevent wing fold over better than traditional designs.

PRODUCT DASHBOARD

CLEANOUT RATE	MATERIAL SIZE	REVERSIBLE	NOISE
5X FASTER	ALL		

TRADITIONAL WING

Diameters up to 52”

Traditional wing pulleys utilize a series of individual wings for the creation of open voids that are designed to allow loose material to fall away from the contact surface.

PRODUCT DASHBOARD

CLEANOUT RATE	MATERIAL SIZE	REVERSIBLE	NOISE
CLEANOUT ENABLED	ALL		

ADDITIONAL / CUSTOM DESIGNS

Self-cleaning designs such as squirrel cage, beater bar, 7-shaped and solid core wings provide intermittent contact for a higher level of clean out over drum pulley designs in small diameter applications.

PRODUCT DASHBOARD

CLEANOUT RATE	MATERIAL SIZE	REVERSIBLE	NOISE
CLEANOUT ENABLED	GRANULAR		

SELF-CLEANING WING PULLEYS

CLEAN OUT RATE

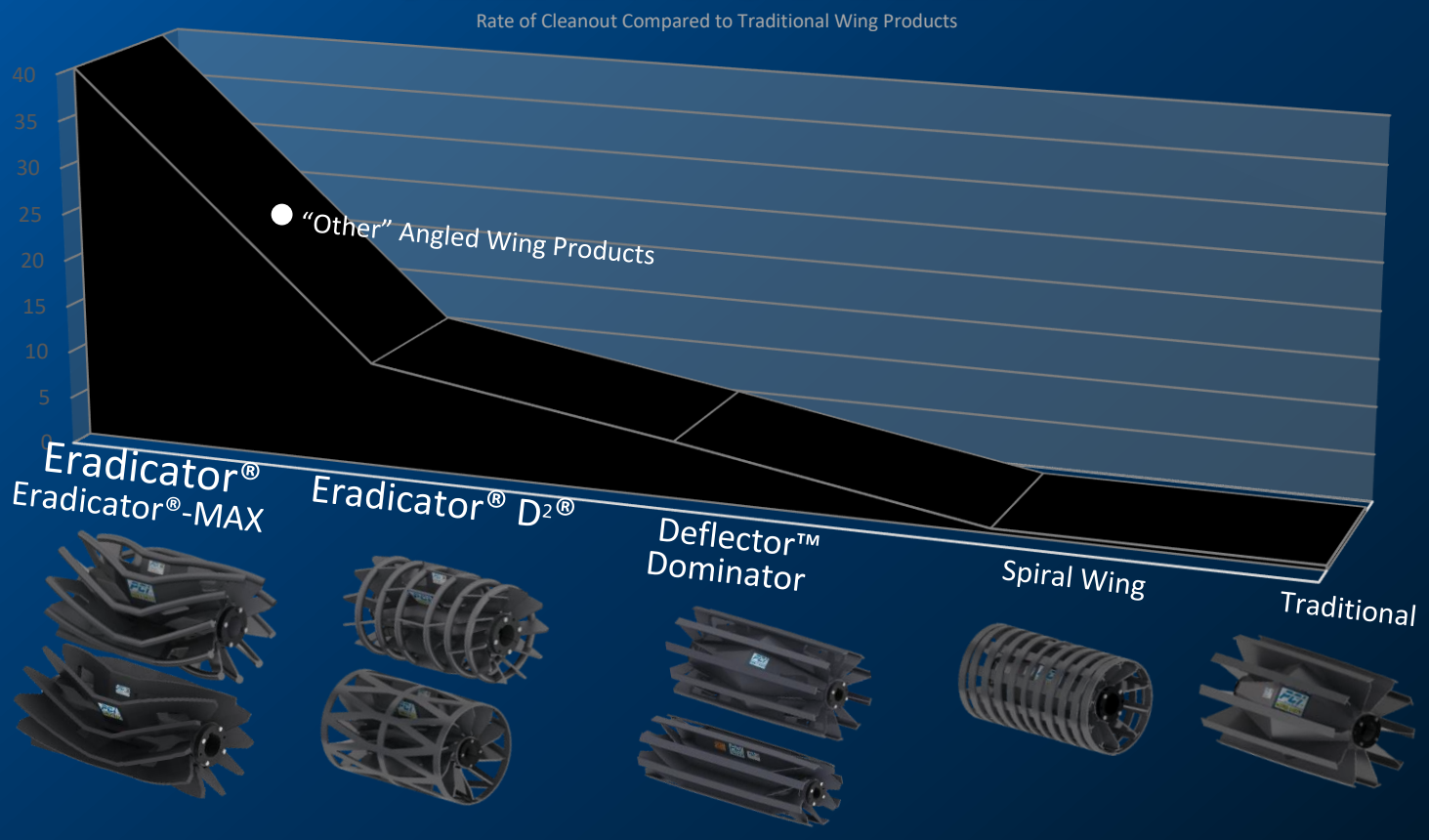

WHY IS CLEANOUT RATE IMPORTANT?

The faster a properly sized wing pulley cleans out loose materials, the longer it will last. It is that simple. Along with the pulley, recirculating materials can also influence the life of the conveyor belt, idlers, and bearings. Self-cleaning pulleys with proven cleanout designs work to lengthen the life of your system components by quickly ejecting materials that damage and wear exposed surfaces.

DOES MATERIAL SIZE AFFECT WHICH PULLEY I SHOULD SELECT?

The size of the open voids in the construction of a self-cleaning wing pulley determine its degree of cleanout efficiency. Because of this, wing pulleys with smaller openings are best suited for eliminating smaller materials.

WHICH WING PULLEY OFFERS THE LOWEST VIBRATION AND NOISE?

The manner in which the wing pulley contacts the belt directly affects belt vibration and noise. While vibration can play in important role in knocking material off the belt, it can cause damage to system components and increase operational noise. Wing pulleys designed to achieve continuous contact with the conveyor belt work to minimize vibration and decrease noise.

DOES THE DIRECTION OF MY CONVEYOR LIMIT MY CHOICES BETWEEN WING PULLEYS?

The design of the wing pulley will influence its performance in applications where the conveyor belt runs in both directions. Reversing applications require a wing pulley designed to not only eliminate the unwanted material but assist in tracking the belt in both directions as well. Products such as the Eradicator D^2 excel in these environments.

(989)358-6149 www.pcimfg.com

CONVEYOR PULLEYS

Wing Pulleys – The Eradicator®

The Eradicator® wing pulley combines the best features of a traditional wing pulley with several unique performance enhancing characteristics to create the optimum self-cleaning solution.

DESIGN BENEFITS

Accelerated Cleanout
Increased Component Life
Quieter Operation
Enhanced Belt Tracking

ERADICATOR® D2®

ERADICATOR®-MAX

Patent# 8,857,606 – Patent# 10,442,631

DIAMETERS AVAILABLE

4” through 52”

DUTY	WING	TIP	MAX WING (Tipless)
Standard	7 ga. (.179”)	3/4"	1/4”-3/8”
Heavy	1/4”	1"	1/2”
Mine	3/8”	1-1/4"	3/4”

HUB STYLES AVAILABLE

Welded Compression Hubs/Bushings *(Type 4)*
Dead Shaft Assembly

“AR” ABRASION RESISTANT MATERIALS AVAILABLE UPON REQUEST

CONVEYOR PULLEYS

Focus Flyer

The Eradicator®

Solutions Through Innovation

The Eradicator® wing pulley combines the best features of a traditional wing pulley with several unique performance enhancing characteristics to create the optimum self-cleaning solution.

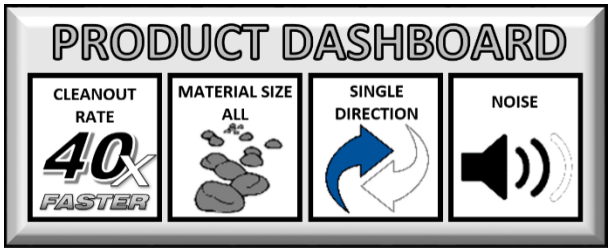

Patent# 8,857,606

FAILURE FREE

SINCE 2016

WATCH THE VIDEO

www.pcimfg.com/portfolio_page/the-eradicator/

ALSO AVAILABLE WITH
ERADI-LAG™ & "AR" WING TIPS

DESIGN BENEFITS...

ACCELERATED CLEANOUT

The Eradicator dominates material displacement by forcing particulate away from its center toward its open ends. PCI's exclusive design retains a traditional wing pulley's belt slapping capability to prevent material buildup while the cleanout ports maximize the material removal rate and minimize recirculation of material. These patented features power the Eradicator with a cleanout rate up to **40 times faster** than a traditional wing pulley, creating the ultimate in self-cleaning solutions.

INCREASED LIFE

The hybrid design of The Eradicator maximizes both the life of the pulley and the conveyor belt. PCI's self-reinforced design discourages wing fold over and prevents incidental damage to the pulley. The Eradicator also maximizes belt life by reducing deformation commonly associated with high center point designs.

ENHANCED BELT TRACKING

The unique profile of the Eradicator encourages conveyor belt tracking by continually guiding the belt with its curved and angled wing members towards a reliable flat center point. This tracking benefit reduces the reliance on routine maintenance and the need for other belt training devices.

QUIETER OPERATION

The Eradicator decreases noise by continuously contacting the belt while its straight center maximizes cleanout. Only the Eradicator achieves the optimum balance of noise reduction and cleanout efficiency.

CONVEYOR PULLEYS

Focus Flyer

The Eradicator®

How is PCI's Eradicator different from a traditional Wing Pulley?

The Eradicator wing pulley retains the belt cleaning benefits of a traditional wing while providing continuous belt contact and improved cleanout efficiency. These additional benefits provide longer component life and decreased noise. Traditional wing pulleys feature straight wings that contact the belt intermittently, entrapping, and recirculating material rather than displacing it, often leading to belt damage and pulley failure.

TRADITIONAL WING

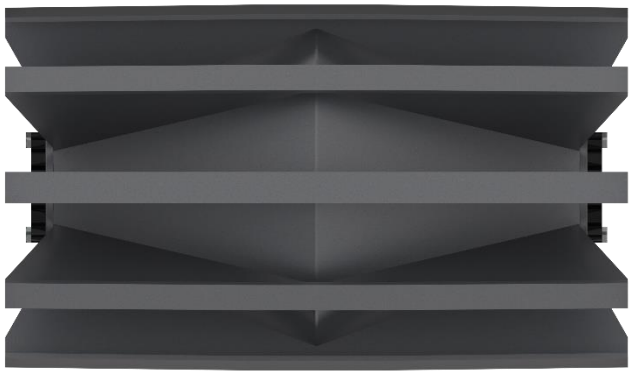

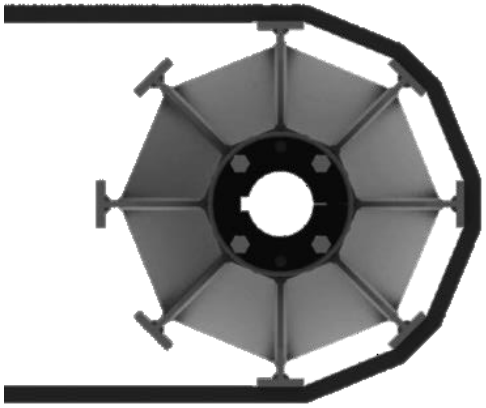

THE ERADICATOR®

What applications benefit from using the Eradicator Wing Pulley?

Applications where loose materials are causing damage to either the belt or conveyor pulleys would benefit from the use of The Eradicator. In addition to solving cleanout problems, PCI's Eradicator decreases operating noise compared to traditional wing designs, making it ideal for applications where noise reduction is also desired.

How does The Eradicator Wing Pulley compare to other enhanced wing pulley designs?

Although other wing products may offer similar benefits, no other product offers the combination of benefits provided by the hybrid design of PCI's Eradicator wing pulley. Spiral wing designs achieve continuous belt contact but underperform in material removal because of their straight wing members. Other enhanced wing products feature a center high point, eliminating the beater bar benefits of a traditional wing and may cause additional belt deformation with reduced belt tracking capability. The hybrid design of The Eradicator retains the belt cleaning benefits of a traditional wing while enhancing cleanout efficiency, offering unparalleled overall performance.

Patent# 8,857,606

CONVEYOR PULLEYS

Focus Flyer

The Eradicator®-MAX

The Eradicator-MAX wing pulley combines the unmatched cleanout rates of the Eradicator with maximum wear-life and strength at all diameters.

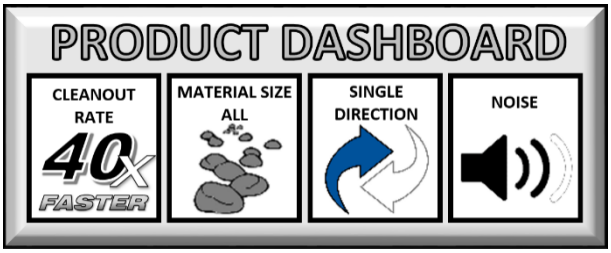

Patent# 8,857,606
"AR" ABRASION RESISTANT WINGS AVAILABLE UPON REQUEST

WATCH THE VIDEO

www.pcimfg.com/portfolio_page/the-eradicator/

Small Diameter Design Option Shown

ALL OF THE BENEFITS OF THE ERADICATOR, PLUS…

MAXIMIZED DESIGN

The patented design of The Eradicator-MAX maintains all the cleanout performance of the original Eradicator while providing unmatched strength and wear life. By removing the original Eradicator wing tips and increasing the wing thickness, wear is maximized allowing for continued operation of the pulley until the wings are too short to shed debris. In larger pulleys such as the Mine Duty 18" x 38", this equates to **3 times the pulley wear life** over the original Eradicator.

SMALL DIAMETER DESIGN OPTION

The patented design of The Eradicator-MAX is also available in small diameters. Traditional small diameter pulleys incorporate straight wings that contact the belt intermittently, entrapping and recirculating material rather than displacing it, often leading to belt damage and pulley failure. The Eradicator-MAX small diameter design has unparalleled performance in applications with space limitations, boasting a cleanout rate up to **20 times faster** than a traditional wing pulley and **2 times the pulley wear life** over traditional tipped designs.

CONVEYOR PULLEYS
Focus Flyer
The Eradicator®-MAX

How is The Eradicator-MAX different from traditional wing tips?
The Eradicator-Max features the industry leading, patented design of the original Eradicator but eliminates the use of round bar wing tips to extend wear life at all pulley diameters. The Eradicator-Max features increased component thickness to maximize rigidity and longevity at all diameters.

THE ERADICATOR®-MAX vs. Traditional TIP DESIGNS

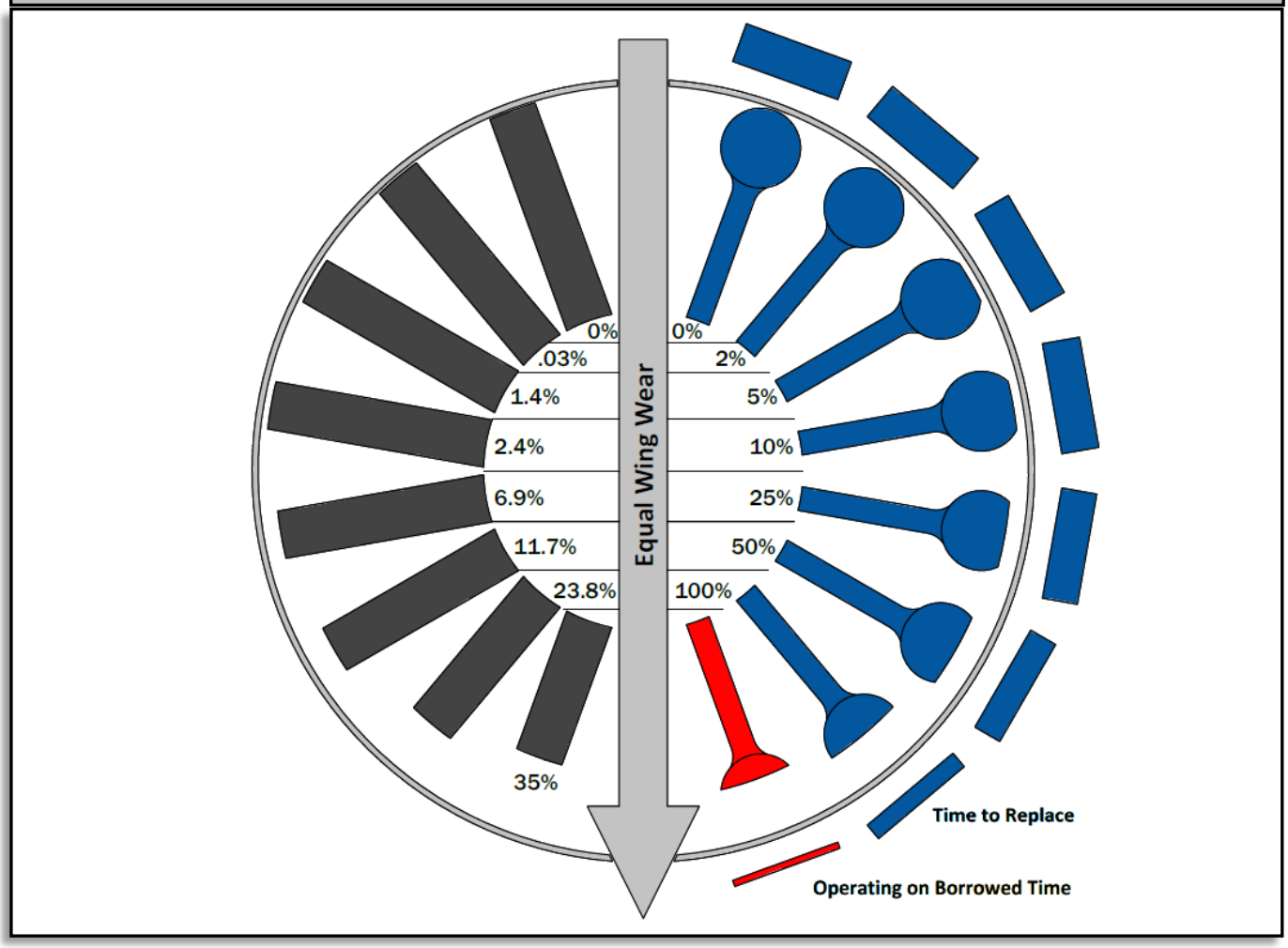

How does the Eradicator-MAX Wing Pulley compare to other wing designs?
The Eradicator-MAX will outlast all traditional wing tips designs. All wing tips will eventually wear to the point where they increase the risk of damage to belts and belt splices. As wing tips wear past the halfway point of the original wing tip material thickness, the pulley is operating on borrowed time. The thinning material develops sharp or thinning edges which is a leading cause of belt and belt splice damage. The Eradicator-MAX solid wing design allows for the wing to be worn without creating sharp edges.

As long as take-up travel can accommodate the change in pulley diameter, the Eradicator®-MAX can be worn down to the core.

Patent# 8,857,606

CONVEYOR PULLEYS

Focus Flyer

Eradicator® D²® - Rim

The Eradicator D² (Directional Discharge) with Diamond Rim incorporates the innovative features of the Eradicator into a design allowing for operation in reversing conveyors of material sizes 3” and smaller. The Eradicator D² also has the unique ability to control the flow of material discharge to one direction only.

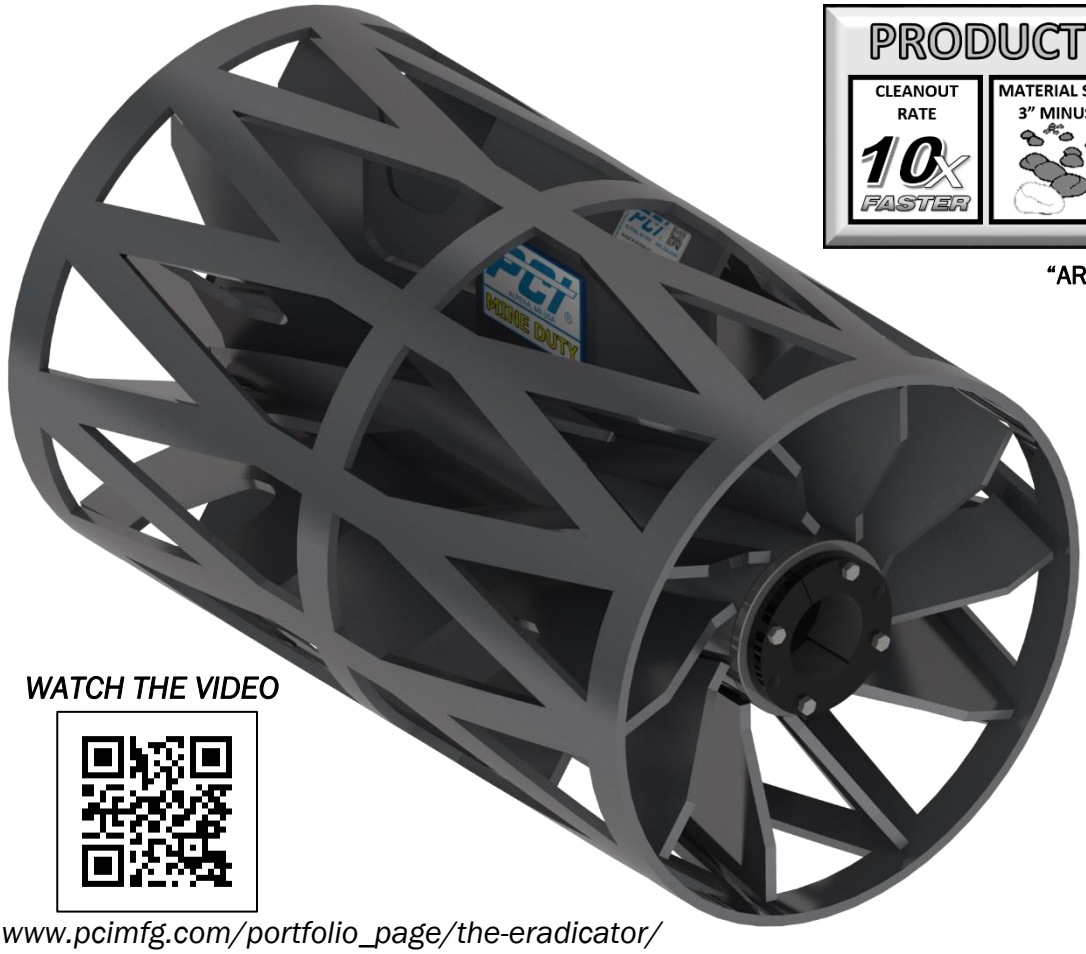

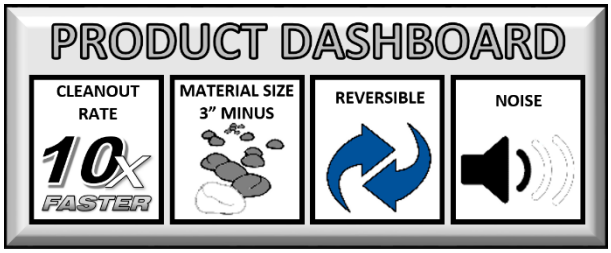

“AR” ABRASION RESISTANT RIM AVAILABLE UPON REQUEST

WATCH THE VIDEO

www.pcimfg.com/portfolio_page/the-eradicator/

Patent# 8,857,606
Patent# 10,442,631

ALL OF THE BENEFITS OF THE ERADICATOR, PLUS...

OPERATION IN BOTH DIRECTIONS - REVERSIBILITY

The Eradicator D² provides an enhanced cleanout solution for applications where the conveyor belt operates in both directions. The patented design of the Eradicator D² has a cleanout rate up to **10 times faster** than traditional wing pulley products.

SINGLE DIRECTION DISCHARGE

The unique design of the Eradicator D² forces material out of the pulley in one direction only allowing the user to control the placement of the ejected material. In reversing or dual-direction applications, the direction of cleanout will change based on the direction of the conveyor belt.

MAXIMIUM BELT CONTACT

By utilizing a steel rim with diamond shaped passageways, the Eradicator D² - Rim achieves maximum continuous belt contact for increased traction and reduced noise. Because of the rim profile, this pulley is best suited for material sizes 3” and smaller.

CONVEYOR PULLEYS

Focus Flyer

Eradicator® D²® - Tips

The Eradicator D² (Directional Discharge) with Circumferential Tips incorporates the innovative features of the Eradicator into a design allowing for operation in reversing conveyors of all material sizes. The Eradicator D² also has the unique ability to control the flow of material discharge to one direction only.

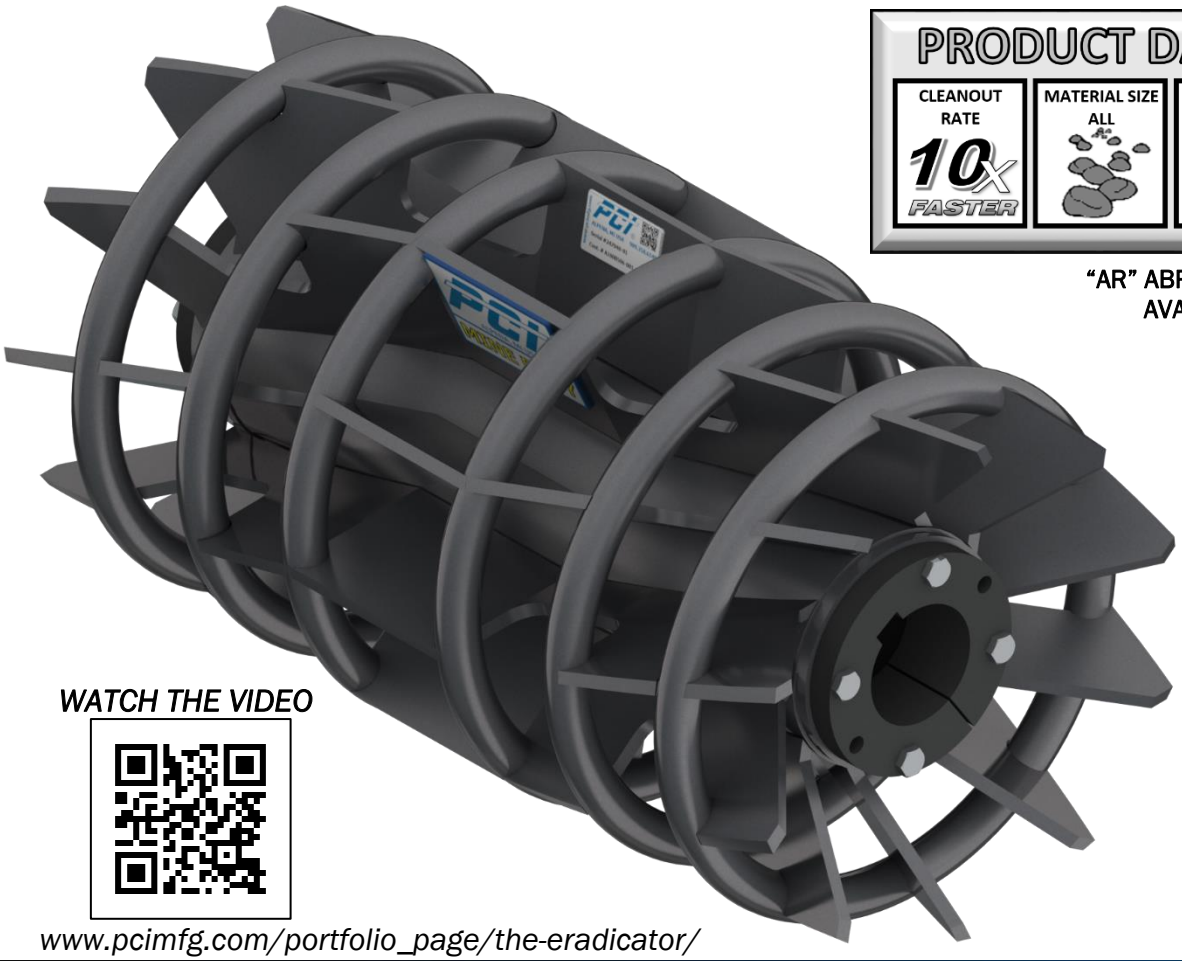

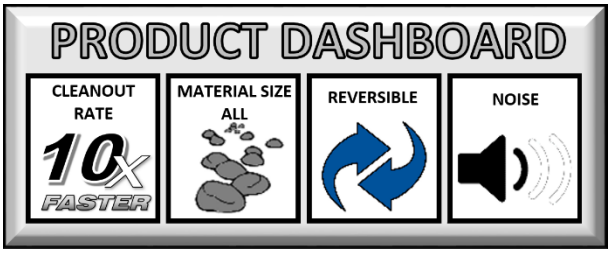

"AR" ABRASION RESISTANT TIPS AVAILABLE UPON REQUEST

WATCH THE VIDEO

www.pcimfg.com/portfolio_page/the-eradicator/

Patent# 8,857,606
Patent# 10,442,631

ALL OF THE BENEFITS OF THE ERADICATOR, PLUS...

OPERATION IN BOTH DIRECTIONS - REVERSIBILITY

The Eradicator D² provides an enhanced cleanout solution for applications where the conveyor belt operates in both directions. The patented design of the Eradicator D² has a cleanout rate up to **10 times faster** than traditional wing pulley products.

SINGLE DIRECTION DISCHARGE

The unique design of the Eradicator D² forces material out of the pulley in one direction only allowing the user to control the placement of the ejected material. In reversing or dual-direction applications, the direction of cleanout will change based on the direction of the conveyor belt.

CONVEYOR PULLEYS
Focus Flyer
The Eradicator® D²®

How is PCI's Eradicator D² different from an Eradicator or traditional Wing Pulley?
The Eradicator D² utilizes the angled wing and cleanout port design of the Eradicator to maximize material removal but unlike the Eradicator, the D² is designed to operate in reversing/dual-direction applications. Additionally, the Eradicator D² forces the material in a single direction so that the ejection of material will take place on one side of the conveyor. The Eradicator D² is the first pulley of its kind to offer these innovative features.

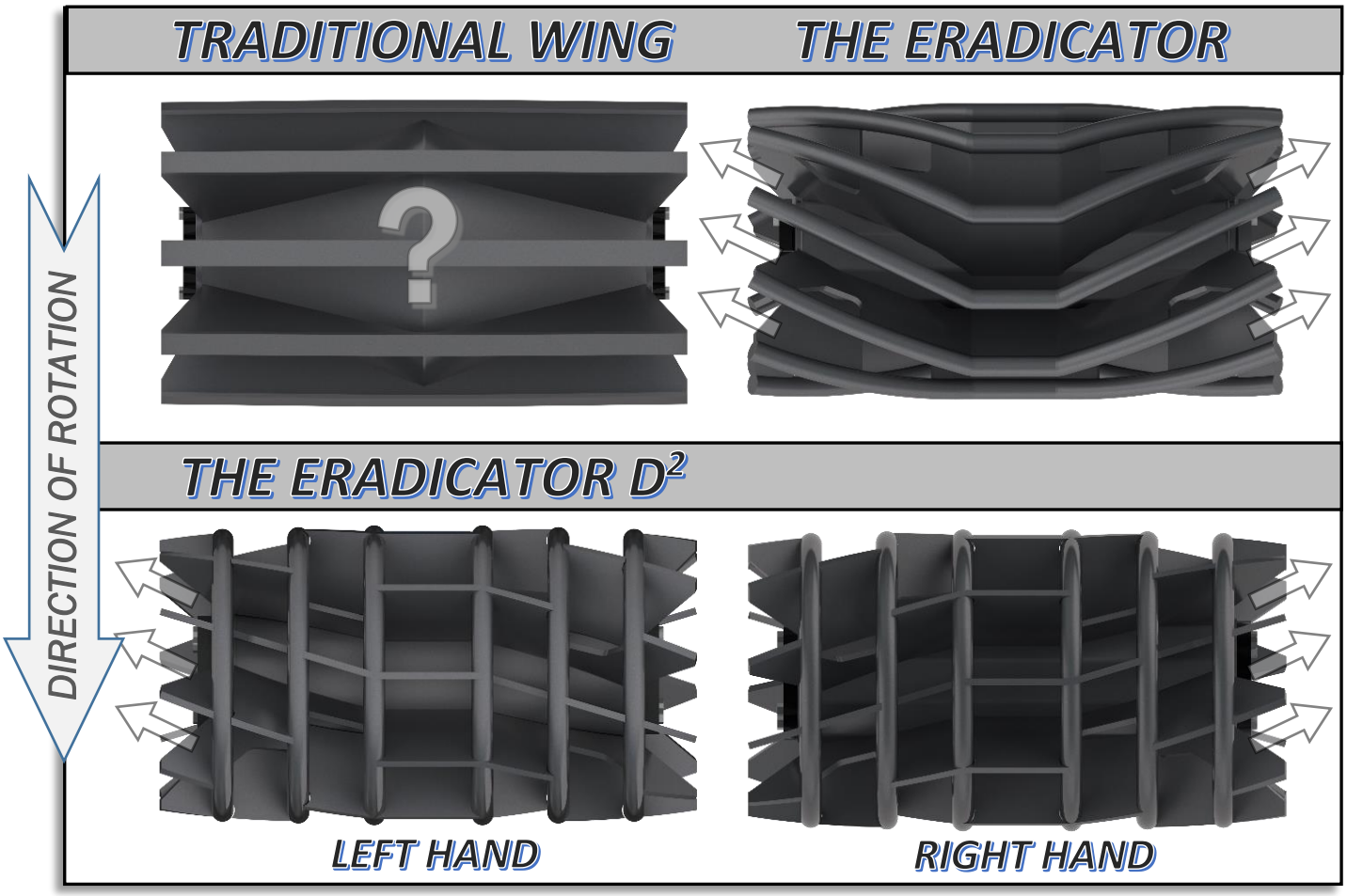

What applications benefit from using the Eradicator D² Wing Pulley?
Reversing applications where loose materials are causing wear or damage to the conveyor belt or pulley would benefit from the Eradicator D² wing pulley. Additionally, by achieving continuous contact with the conveyor belt the Eradicator D² decreases noise and vibration to help eliminate related issues. Finally, by forcing the material in a single direction, the Eradicator D² provides an ideal solution for applications such as conveyor tunnels or tubular galleries, where accumulation of tramp materials on one side is causing increased maintenance costs or safety concerns.

How do I order an Eradicator D² Wing Pulley?
The Eradicator D² is designed with either Tips or Rim in a Right or a Left hand configuration. The Right or Left designation specifies the side of the conveyor in which the materials will be ejected. In a dual-direction/reversing conveyor, the side of ejection will change with the direction of the belt.

Patent# 8,857,606
Patent# 10,442,631

CONVEYOR PULLEYS

Traditional Wing Pulleys

Standard Duty – Heavy Duty – Mine Duty

PCI® Traditional Wing Pulleys are designed for bulk handling applications where material removal is desired. Our construction standards allow for selection into a variety of applications ranging from light loads to extreme impact loading.

The Dominator

Heavy Duty 8”-12”
Deflectors
Double supported wing tips

The Deflector

Heavy Duty 14”-52”
Deflectors
Gussets

Standard Duty

Mine Duty

Deflectors
Gussets
Reinforcing rings

DIAMETERS AVAILABLE

6” through 52”

DUTY	WING	WING TIP
Standard	7 ga.(.179”)	1/4”
Heavy	7 ga.(.179”)(min)	3/8”
Mine	3/8”*(min)*	5/8”

HUB STYLES AVAILABLE

*Plain Bore or Welded Shaft *(Type 1/Type A)*
*Keyed Hubs *(Type 2/Type B/Type D)*
Internal Bearings *(Type 3/Type C)*
Welded Compression Hubs/Bushings *(Type 4)*
Contoured Integral End Disks/Bushings
Keyless Locking Devices
Dead Shaft Assembly

Hub style availability will vary based on pulley construction.

CONVEYOR PULLEYS

Focus Flyer

The Deflector™ Wing Pulley

The Deflector™ wing pulley increases the performance of a traditional wing pulley with the addition of PCI's proven and patented ports coupled with angled deflectors to continuously direct material to the outer edges of the pulley.

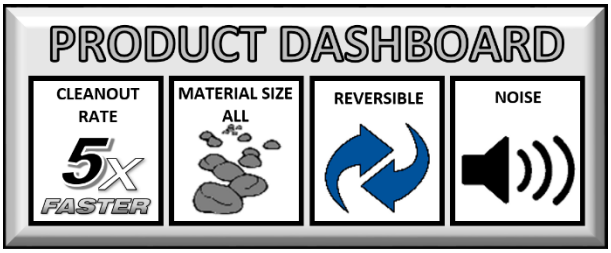

WATCH THE VIDEO

www.pcimfg.com/portfolio_page/the-eradicator/

Patent# 8,857,606
Patent# 10,442,631

DESIGN BENEFITS...

ACCELERATED CLEANOUT

The design of the Deflector™ wing pulley stems from the proven performance results of the Eradicator®'s angled wings and cleanout ports. The patented design of the Deflector maintains the straight wing members of a traditional wing but incorporates deflectors to fling material towards the edges. When installed with the deflectors angled towards the direction of belt travel, the Deflector minimizes recirculation of material and provides a cleanout rate up to **5 times faster** than its traditional counterparts provide. Even when installed in the opposite direction, this innovative design has a cleanout rate 2 times faster than a traditional wing pulley. 0

BELT CLEANING

The straight wing members of the Deflector wing pulley allow for intermittent contact with the conveyor belt and provide belt slapping and vibration to help knock lodged materials off the conveyor belt.

CONVEYOR PULLEYS
Focus Flyer
The Deflector™ Wing

Solutions Through Innovation

How is PCI's Deflector™ Wing different from a traditional Wing Pulley?
Traditional wing pulleys feature straight wings that contact the belt intermittently, entrapping, and recirculating material rather than displacing it, often leading to belt damage and pulley failure. The Deflector wing pulley utilizes the same straight wing members as a traditional wing pulley but drastically improves cleanout efficiency from its cleanout ports and patented deflectors. The accelerated cleanout produced by the deflectors and ports will provide longer component life for the pulley and the belt.

TRADITIONAL WING

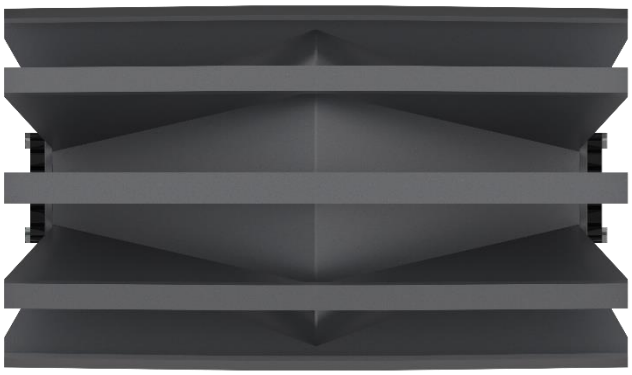

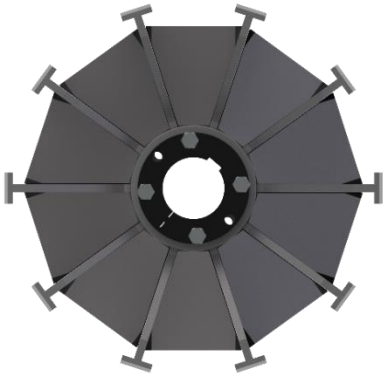

THE DEFLECTOR WING

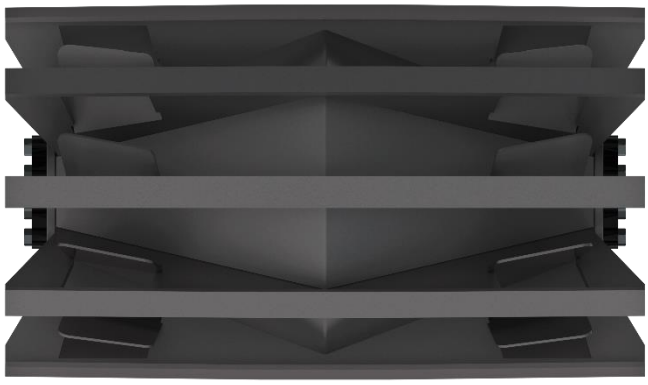

What applications benefit from using the Deflector Wing Pulley?
Because the Deflector wing pulley improves on the performance of a traditional wing pulley, any bulk material application where a traditional wing pulley is being used will benefit from the Deflector. However, if maximum cleanout efficiency is desired, no other conveyor pulley will perform as well as the Eradicator.

How do I order a Deflector Wing Pulley?
The Deflector will replace all PCI traditional wing pulleys 14" in diameter and larger when construction allows. When you order a traditional wing pulley from PCI in this size range, you'll receive the Deflector and its innovative design features.

Patent# 8,857,606
Patent# 10,442,631

CONVEYOR PULLEYS

Focus Flyer

The Dominator Wing Pulley

The patented design of the Dominator 8-12” diameter Heavy Duty (HD) Wing Pulley maximizes the material cleanout rate by incorporating the proven design features of The Eradicator® Wing. Self-gusseted angled wings provide reinforcement to prevent wing fold over better than non-gusseted designs.

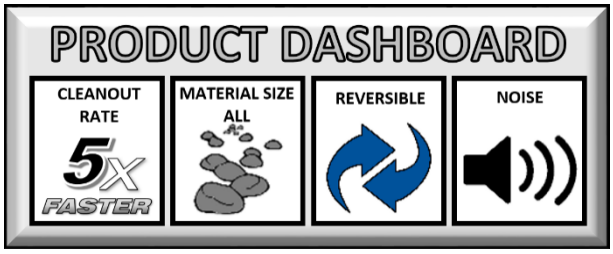

Patent# 8,857,606

DESIGN BENEFITS...

ACCELERATED CLEANOUT

The patented design of the Dominator HD Wing Pulley maximizes the material cleanout rate by incorporating the proven design features of The Eradicator® Wing. The Dominator™ minimizes recirculation of material and provides a cleanout rate up to 5 times faster than its traditional counterparts provide. Even when installed in the opposite direction, this innovative design has a cleanout rate 5 times faster than a traditional wing pulley.

BELT CLEANING

The straight wing members of the Dominator HD wing pulley allow for intermittent contact with the conveyor belt and provide belt slapping and vibration to help knock lodged materials off the conveyor belt.

THE STRENGTH OF A GUSSETED WING WITHOUT THE TRADITIONAL GUSSETS

Self-gusseted angled wings add more strength and go further to prevent wing fold over than traditional gussets can in this size range. Each wing tip supported by two consecutive wings for unprecedented support.

CONVEYOR PULLEYS

Additional / Custom Designs

SPIRAL STYLE PULLEYS

A metal strip contact surface is fixed in a spiral pattern around the circumference of a drum or wing pulley to achieve continuous contact with the conveyor belt while enhancing material removal. Spiral style pulleys are primarily used on bulk handling systems where material buildup and continuous contact with the conveyor belt are operational concerns.

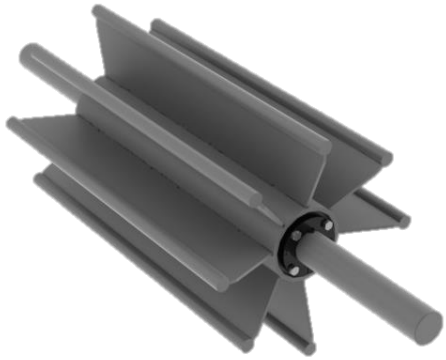

CUSTOM WING TIP OPTIONS

Several styles of wing tips can be substituted for PCI standard flat bar tips. Options include round bar (shown here), thicker flat bar and AR-Abrasion Resistant materials.

SQUIRREL CAGE

Squirrel cage pulleys are comprised of solid steel round bars welded to a series of disks which serve as the pulleys core. The open body construction provides for added clean-out over round bar or standard wing pulley designs.

BEATER BAR

Beater Bar designs feature a series of solid steel round bars welded to a tube or pipe core. The robust construction provides an increased safety factor in harsh environments.

“7” SHAPED FINS

7-Shaped wing pulleys feature steel wing members formed to a bent shape resembling the number seven. The profile of the wing member reduces belt wear while providing an economical construction for light duty applications.

SOLID CORE

Solid core pulleys offer self-cleaning benefits in the smallest of pulley diameters. Wing members can be designed using profiles including fins with flat tips, round bar or custom profiles.

CONVEYOR PULLEYS
Focus Flyer
Dead Shaft Assemblies

PCI® Dead Shaft Assemblies are designed to maximize conveyor pulley life by eliminating the risk of failure from end disk fatigue while increasing the pulley's overall capacity.

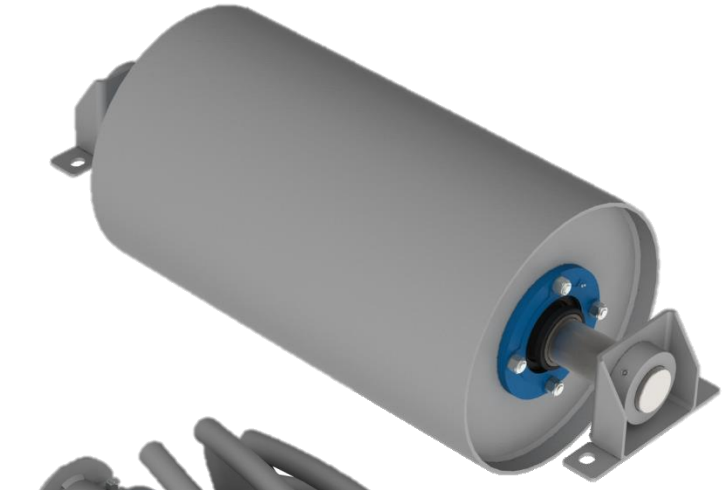

DESIGN BENEFITS

Increased Shaft Capacity

Eliminates Risk of End Disk Fatigue

Bolt-In Replacement for Pillow Block Mounted Assemblies

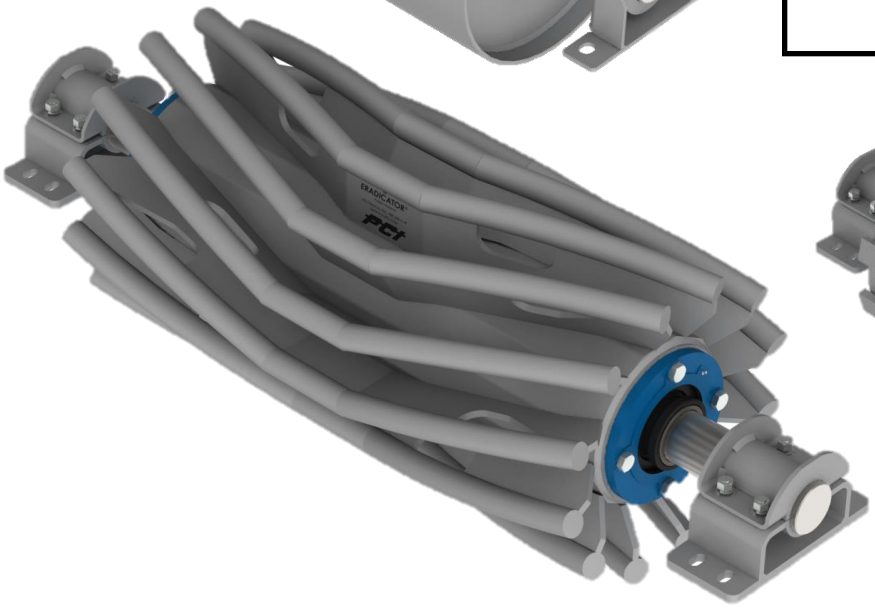

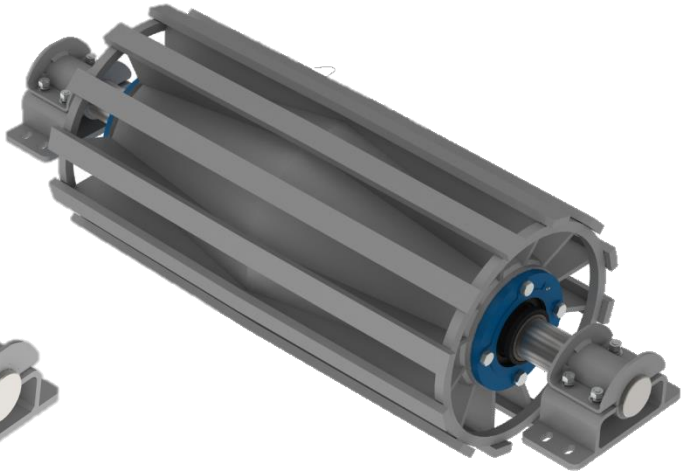

Increased Shaft Capacity: Mounting the bearings to the pulley allows the shaft to remain in a fixed position while in operation. Keeping the shaft in a fixed, non-rotating position eliminates the risk of bending fatigue associated with traditional live shaft assemblies. This design change increases the capacity of the pulley assembly.

Eliminates Risk of End Disk Fatigue: PCI Dead Shaft Assemblies utilize SKF® self-aligning spherical roller bearing units which absorb any bending that may occur in the shaft. This self-aligning feature eliminates the transfer of shaft bending into the end disks, eliminating the risk of end disk fatigue.

Bolt-In Replacement for Pillow Block Mounted Units: PCI welded steel Dead Shaft pedestals are available in two styles, designed as drop-in replacements for standard Medium Duty Ball Bearing, Spherical and Type E Pillow Block bearing units.

CONVEYOR PULLEYS
Focus Flyer
Pulley Assemblies

PCI® conveyor pulley products can be ordered complete with custom detailed shafting, SKF mounted bearings and Take-Up Frames as a ready-to-install assembly kit. For your convenience, PCI has partnered with SKF to provide stock availability on a variety of bearing styles and sizes. Additionally, PCI can professionally install SAF style bearings on the pulley shaft to your specifications, reducing field assembly errors and installation time.

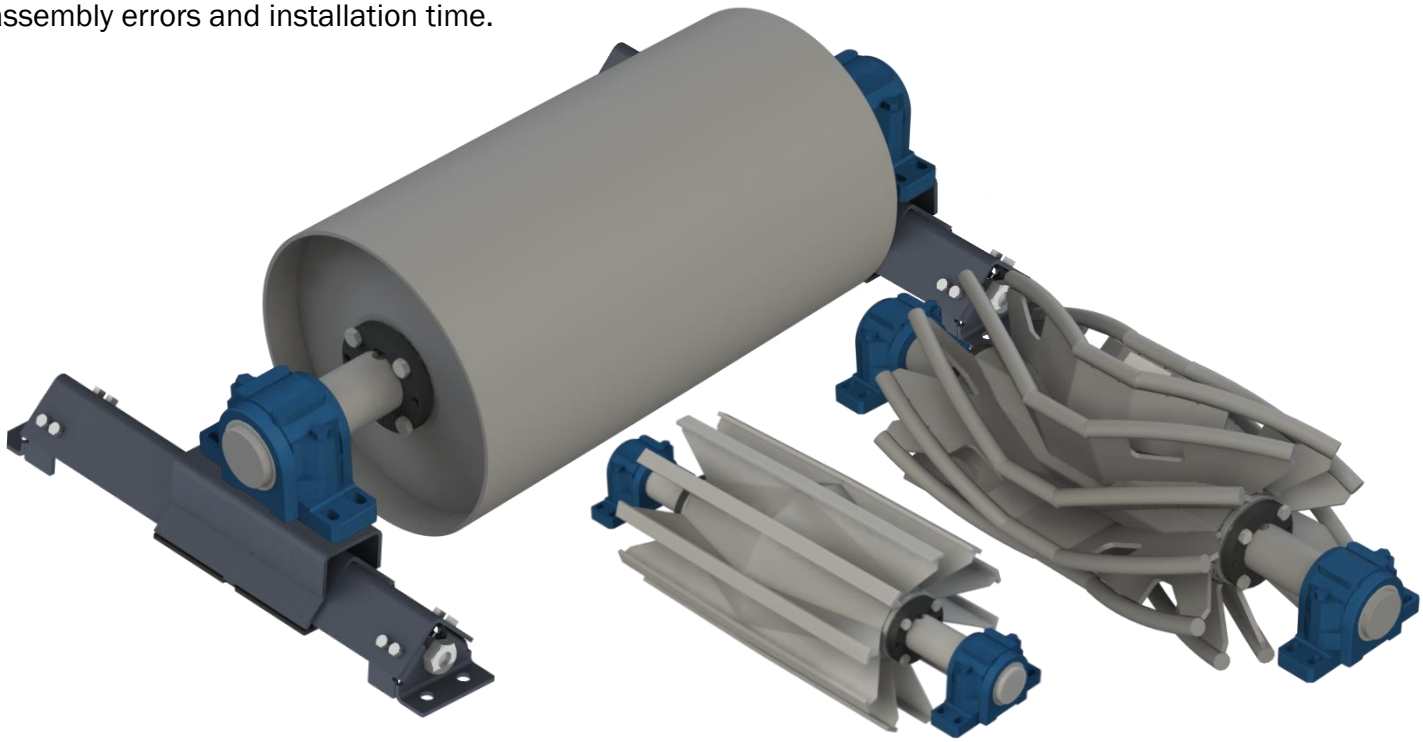

P2B Standard Duty Ball Bearing Units P2BM Medium Duty Ball Bearing Units	
SKF	REPLACES
P2B	Dodge P2B-SC / Sealmaster NP / Browning VPS2 / Rexnord P35
P2BM	Dodge P2B-SCM / Sealmaster MP / Browning VPS / Rexnord MPS

P2BE/P4BE Type-E Spherical Roller Bearing Units	
SKF	REPLACES
P2BE / P4BE	Dodge P2B-E & P4B-E / Sealmaster USRBE Browning PBE920 / Rexnord EPB224(00)H & FH

SAF/FSAF 225 Split Housing Adaptor Mount Spherical Roller Bearing Units*	
SKF	REPLACES
SAF / FSAF	Dodge P2B5(00)-USAF / Rexnord ZAF / Sealmaster USRB

* When ordered assembled with a pulley and shaft, SAF/FSAF units are filled with Mobil SHC 220 Synthetic Grease. Unassembled SAF /FSAF units are shipped without grease. Type-E units are shipped with SKF factory installed grease.

When relubricating, care must be taken to use greases that are compatible with the original grease. SKF suggests a medium temperature, lithium calcium base, NLGI Grade No. 2 grease having an oil with a viscosity of 200 mm^2/s at 40°C. When a unit is being relubricated, avoid excessive pressure which may cause damage.

CONVEYOR PULLEYS

Focus Flyer

The Ice-Eradicator®

PCI's patented Ice-Eradicator® is the world's first proven solution to temper the costly effects of frozen conveyor belts. When installed in the head position, a drum style Ice-Eradicator® will de-ice and soften the conveyor belt encouraging startup in freezing conditions. PCI's innovative technology can also be adapted to any Eradicator® or Deflector® wing pulley to discourage problems related to ice buildup in non-drive positions.

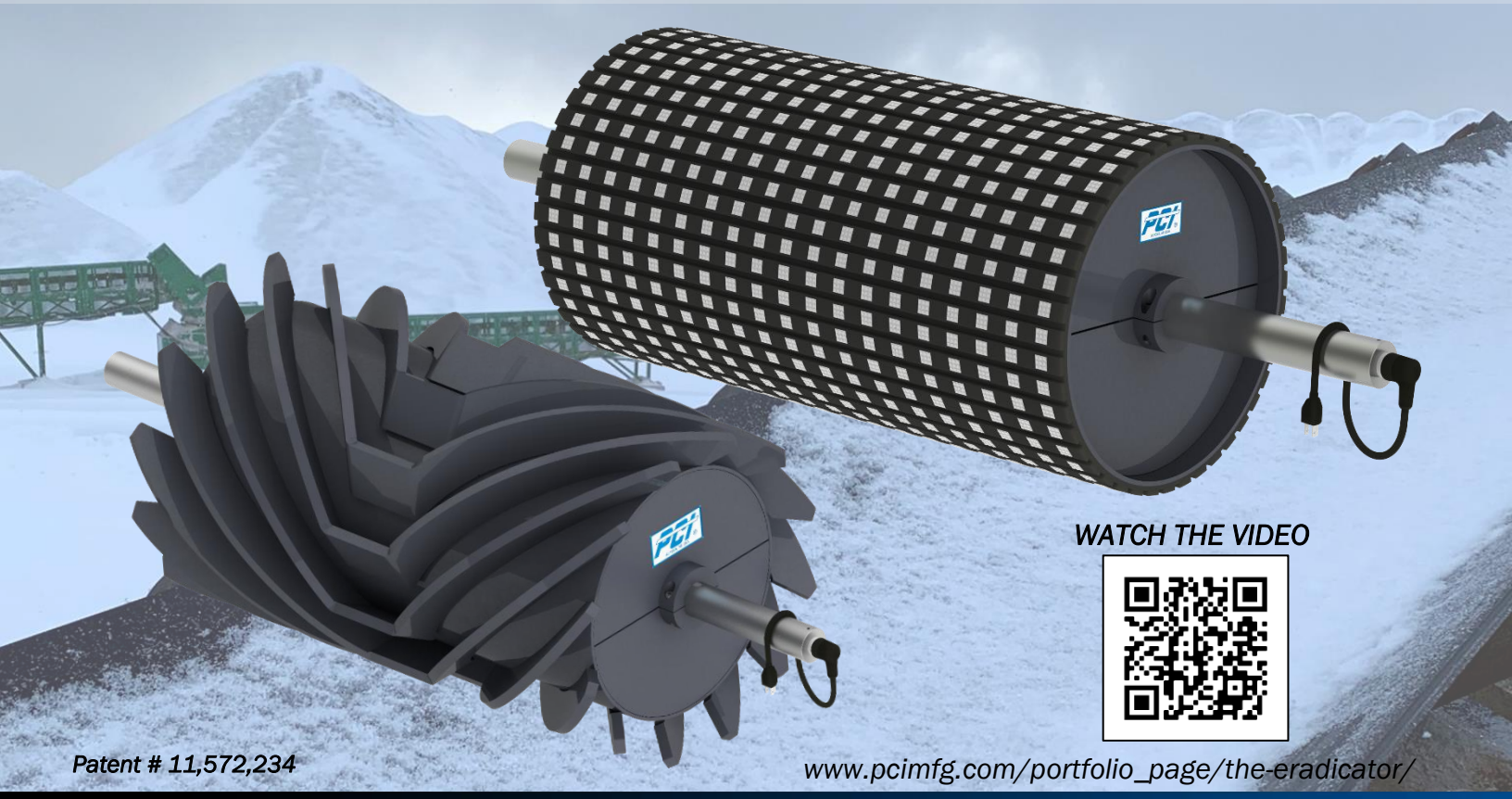

DESIGN BENEFITS...

COLD WEATHER PERFORMANCE

The Ice-Eradicator reduces belt slip in cold environments through its patented heated core technology. In freezing environments, conveyor belts become rigid, preventing conveyor operation by disrupting the ability of the drive pulley to grip the belt. The Ice-Eradicator enhances belt grip in cold temperatures by maintaining an elevated temperature near the pulley's outer surface thereby heating the belt to discourage belt freeze.

REDUCE SAFETY HAZARDS

In cold weather months, frozen belts increase the amount of time required to successfully startup a plant operation. To minimize downtime, unorthodox methods of resolution are sometimes employed. Many of these methods increase the likelihood of workplace accidents. The Ice-Eradicator reduces the safety risk posed by direct human intervention at the drive position with tools like propane burners or liquid chemicals.

NO DIRECT FLAME

Alternate methods for resolving frozen conveyor belts utilize direct flame to provide the heat necessary for startup. Although effective, use of direct flame at the site can increase the risk of fire or workplace injury. In addition, heating fuel can prove costly during cold weather months. The patented design of the Ice-Eradicator eliminates the need for direct flame providing proven performance without the added cost and risk of direct flame.

SIMPLIFIED INSTALLATION

The Ice-Eradicator is engineered for easy installation with minimal modification to the existing conveyor structure. Worry free performance at sub-zero temperatures is possible with a single 120V 15A power service.

CONVEYOR PULLEYS
Focus Flyer
The Ice-Eradicator®

How does PCI's Ice-Eradicator work?

PCI's patented technology incorporates a slip ring and heating element to heat an environmentally friendly internal liquid solution. With a GFCI protected 120V 15A power supply, the Ice Eradicator can be energized just hours prior to conveyor system start-up (harsher environments may require more time). When energized, the surface temperature of the pulley increases at a rate of up 25°F per hour which increases the belt temperature at a rate of up 5°F per hour. By elevating the surface temperature of the pulley, the belt to pulley connection is de-iced and the belt softened increasing the likelihood of successful conveyor start-up. In critical applications and all non-drive positions, the Ice-Eradicator may be energized during operation for performance in extreme conditions.

Patent # 11,572,234

In an environment of 20°F ambient temperature and 5" of fresh snow, PCI's Ice-Eradicator completely melts snow and ice in three hours with a single 120V 15A power source.

60 MINUTES | 1HR 40 MINUTES | 2HRS 20 MINUTES | 3 HOURS

ELAPSED TIME AFTER ENERGIZING PCI ICE-ERADICATOR

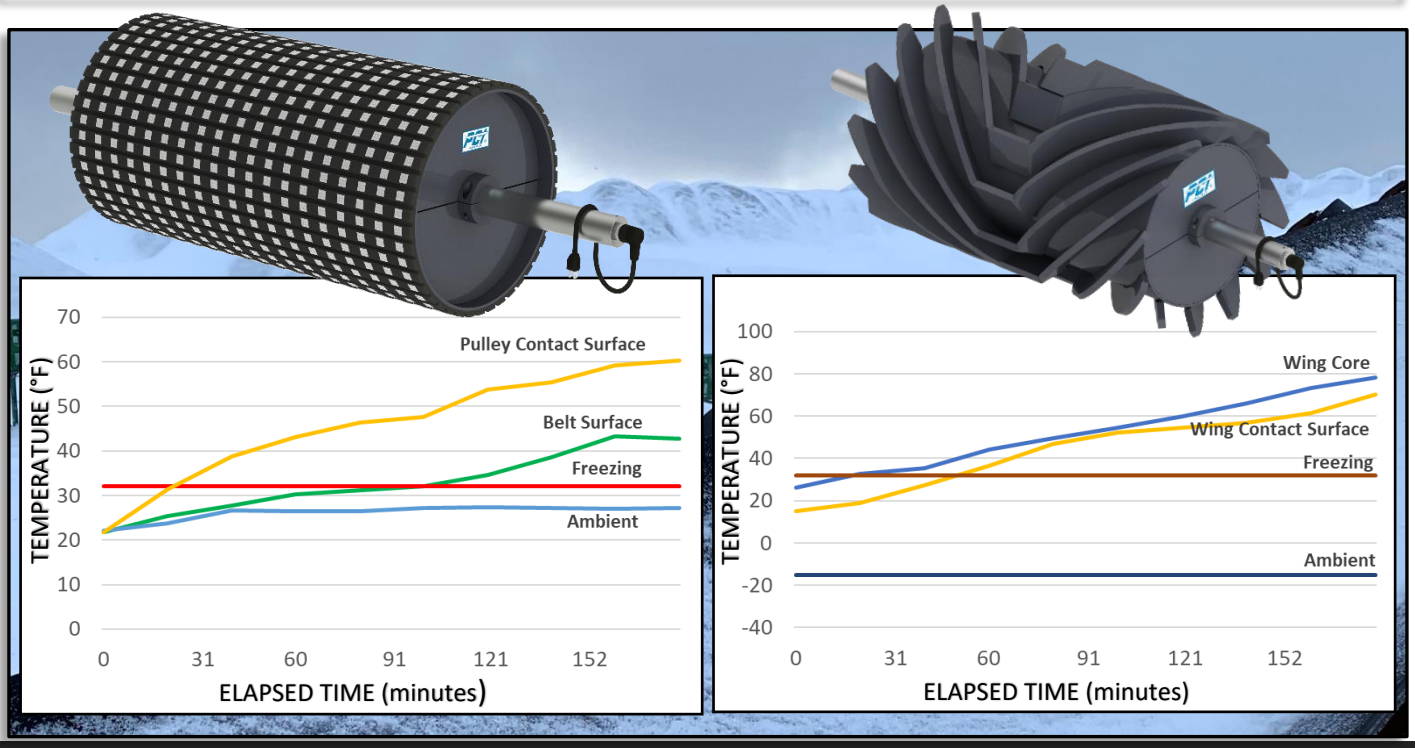

STAINLESS STEEL PULLEYS

Built to Last, Built to Perform

PCI has been manufacturing conveyor pulleys with quality and reliability at the forefront. To help simplify your selection process, PCI has developed four distinct classes of stainless steel conveyor pulleys designed to meet the requirements of a variety of applications. Our unique approach to stainless steel conveyor pulley design provides you with stainless steel selection and solutions simplified.

(989)358-6149
www.pcimfg.com

CONVEYOR PULLEYS

Focus Flyer

Corrosion Resistant Pulleys

Selection of appropriate components plays a critical role in achieving ultimate success in conveyor design. Without the use of proper tools and training, this selection process can be cumbersome and time consuming. To help simplify your selection process, PCI has developed four distinct classes of stainless steel conveyor pulleys designed to meet the requirements of a variety of applications. Our unique approach to conveyor pulley design provides you with *stainless steel selection and solutions simplified*.

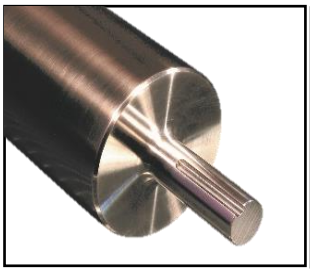


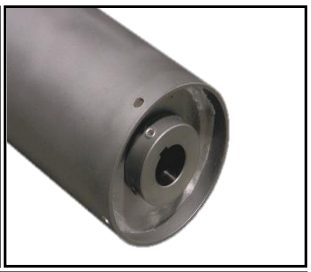

	SANITARY	SUPER-CLEAN	EASY-CLEAN	EXTRA-VALUE
304 Stainless	✓	✓	✓	✓
Surface Finish	32 Ra	125 Ra	250 Ra	"As Fabricated"
Flush End Disks	✓	✓	✓	
Fully Machined	✓	✓		
Media Treated +			✓	✓
Hub Styles Available	Welded Shaft	Welded Shaft Keyed Hubs	Welded Shaft Keyed Hubs Internal Bearings	Welded Shaft Keyed Hubs Internal Bearings Compression Hubs
Cost	$$$$$	$$$$	$$$	$$

+ Media treated surfaces will have visual differences when Formed Crown (FC) vs. Machine Crown (MC) series and skim or sand marks will be seen

ALUMINUM *A Lighter Approach to Corrosion Resistance*

PCI Aluminum conveyor pulleys offer corrosion resistant alternatives to stainless steel with these unique advantages:

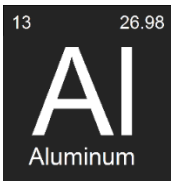

LIGHTER WEIGHT: The density of aluminum is nearly one-third the density of steel, giving it a distinct advantage in applications where the weight of pulley construction is a concern.

LOWER COST: The price of aluminum material is normally between the cost of carbon steel and stainless steel making it an economical alternative to stainless steel when carbon steel isn't providing the required level of corrosion resistance.

CONVEYOR PULLEYS

Stainless Steel – Sanitary Class

Manufactured to meet 3A, USDA and FDA requirements for cleanliness, PCI® Sanitary Class pulleys offer a premium surface finish and intelligent construction for application success in strict sanitary environments. All steel surfaces are manufactured to a finish of 32 micro-inches or better and are free of imperfections such as scratches, nicks, or pits. Pulley construction is designed with flush end disks to deter buildup of harmful bacteria and axles are welded to prohibit access of contaminants to internal cavities. Extreme care is taken to avoid cross-contamination of stainless steel surfaces with ferrous metals during the entire manufacturing process. The design, construction and care taken while manufacturing a PCI Sanitary Class pulley make it the highest grade and most expensive of the PCI stainless steel conveyor pulley classes.

DESIGN BENEFITS

No Surface Imperfections
Cross Contaminant Free
Shaft Center Drills Removed
All Surfaces are Machined
Aesthetically Pleasing

CONSTRUCTION
304 Stainless Steel

SURFACE FINISHES
STAINLESS STEEL: 32 Micro-Inches (or better)
LAGGING: Vulcanized 64 Micro-Inches (or better)

END PLATE LOCATION
Flush with Pulley Ends

HUB STYLES AVAILABLE
Welded Shaft *(Type 1/Type A)*
Manufactured with shaft installed

CONVEYOR PULLEYS

Stainless Steel – Super-Clean Class

Solutions Through Innovation

Manufactured to provide maximum cleaning efficiency and general aesthetics to the application, PCI® Super-Clean Class pulleys are intended for conveyor applications requiring the benefits of a fully machined pulley where USDA or FDA sanitary compliance is not required. Super-Clean pulleys are designed with a 125 micro-inch or better surface finish on all surfaces including weld fillets to improve removal of debris. End plates are flush with the pulley ends to minimize buildup of debris. Although offering a high-grade finish, surfaces of a Super-Clean pulley may include imperfections such as pits, scratches or small pockets. Super-Clean pulleys offer an economical alternative to achieve the benefits of a fully machined surfaces of a sanitary class pulley.

DESIGN BENEFITS

All Surfaces are Machined
Aesthetically Pleasing

CONSTRUCTION
304 Stainless Steel

SURFACE FINISHES
125 Micro-Inches (or better)
LAGGING: Vulcanized 125 Micro-Inches (or better)

END PLATE LOCATION
Flush with Pulley Ends
(Keyed hubs may extend)

HUB STYLES AVAILABLE
Welded Shaft *(Type 1/Type A)*
Manufactured with shaft installed
Keyed Hubs *(Type 2/Type B/Type D))*

CONVEYOR PULLEYS

Stainless Steel – Easy-Clean Class

Manufactured to provide benefits in cleaning efficiency to the application, PCI® Easy-Clean class pulleys are intended for conveyor applications where direct food contact is not a primary concern. Easy-Clean pulleys offer a 250 micro-inch or better surface finish on all surfaces including weld fillets to allow for easy removal of material from pulley surfaces and end plates flush with the pulley ends to minimize buildup of debris. Because of their intended use, surfaces may include imperfections such as pits, scratches or small pockets but are media treated to provide a uniform visual appearance. Easy-Clean class pulleys offer an economical solution for applications desiring some level of cleaning efficiency.

DESIGN BENEFITS

Surfaces are Media Treated
Aesthetically Pleasing

CONSTRUCTION

304 Stainless Steel

SURFACE FINISHES

250 Micro-Inches (or better)
LAGGING: Any PCI offering

END PLATE LOCATION

Flush with Pulley Ends
(Keyed Hubs and Bearing Races may extend)

HUB STYLES AVAILABLE

Welded Shaft *(Type 1/Type A)*
Keyed Hubs *(Type 2/Type B/Type D)*
Internal Bearings *(Type 3/Type C)*

CONVEYOR PULLEYS

Stainless Steel – Extra-Value Class

Solutions Through Innovation

Designed to provide corrosion resistance and reduced magnetic properties to the intended application, PCI® Extra-Value Class pulleys are intended for conveyor applications where sanitary requirements are not a concern. Because of their intended use, this class of pulleys offers a minimum grade surface finish, welds in "as-welded" condition and end plates recessed in the pulley ends. Pulleys in this class may have slight surface imperfections including pits, scratches, and small pockets however, surfaces are media treated to provide a uniform visual appearance. Extra-Value class pulleys are available in all standard hub configurations and are the most economical of the PCI Stainless Steel conveyor pulley classes.

DESIGN BENEFITS

Surfaces are Media Treated
Aesthetically Pleasing

CONSTRUCTION

304 Stainless Steel

SURFACE FINISHES

"As Fabricated"
LAGGING: Any PCI offering

END PLATE LOCATION

Recessed

HUB STYLES AVAILABLE

Plain Bore or Welded Shaft *(Type 1/Type A)*
Keyed Hubs *(Type 2/Type B/Type D)*
Internal Bearings *(Type 3/Type C)*
Welded Compression Hubs/Bushings *(Type 4)*
Contoured Integral End Disks/Bushings

CONVEYOR PULLEYS

Stainless Steel – Class X

PCI's dedication to creating a solution for every application drives our Class X product offering. The finish, construction and features of a Class X Pulley are custom designed every time to meet the individual needs of your unique application. If PCI hasn't already designed your solution, ask for a Class X solution!

CLASS "X" EXAMPLES INCLUDE:

De-Magnetization
Food Grade Lagging
Knurling
Special Finishes
Wing Pulleys
V-Grooves
Super-Sanitary Designs
Your Next Solution.....

CONVEYOR PULLEYS

V-Groove Construction Styles

2-Piece Sleeve

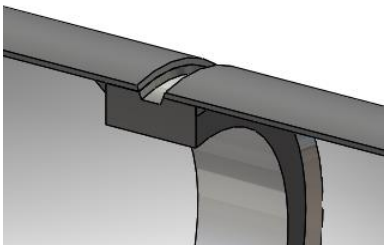

A steel sleeve is inserted inside the pulley and welded 360° on both sides. A V-groove is then machined into the pulley core and the sleeve.

3-Piece Sleeve

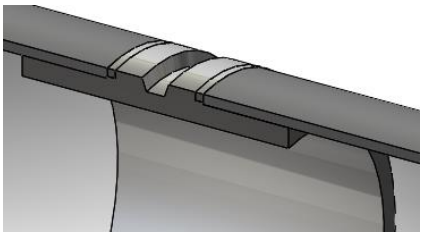

A pre-machined steel v-groove sleeve is inserted between two separate sections of pulley core and welded 360° around the pulley from the outside.

Direct Machine Into Core

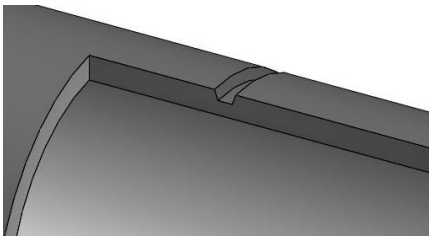

Desired v-groove dimensions are machined directly into a pulley core of a thickness greater than the depth of the v-groove.

Vulcanized Lagging Only

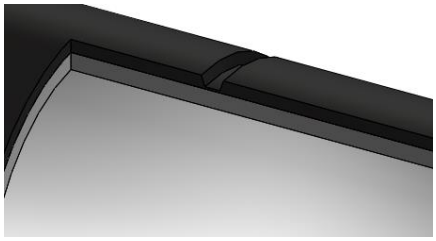

Desired v-groove dimensions are machined directly into lagging of a thickness greater than the depth of the v-groove.

Vulcanized Lagging 2 pc. Sleeve

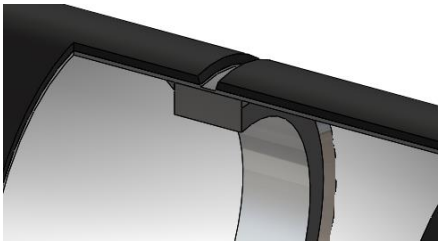

A steel sleeve is inserted inside the pulley and welded 360° on both sides. The pulley is lagged, and the V-groove is then machined into the lagging, the pulley core and the sleeve.

Vulcanized Lagging 3 pc. Sleeve

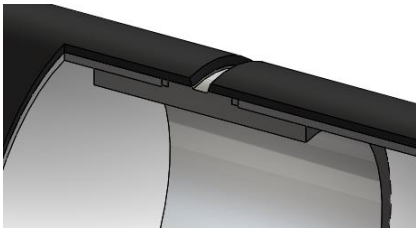

A steel sleeve is inserted between two separate sections of pulley core and welded 360° around the pulley from the outside. The pulley is lagged, and the V-groove is then machined into the lagging and the sleeve.

SWRT / 2-Piece Sleeve Style

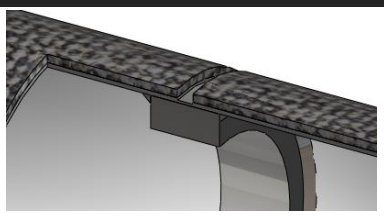

A steel sleeve is inserted inside the pulley and welded 360° on both sides. A V-groove is machined into the pulley core and the sleeve. Spiral wrap rough top (SWRT) lagging is then installed such that it is flush with the edge of the v-groove.

SWRT / 3-Piece Sleeve Style

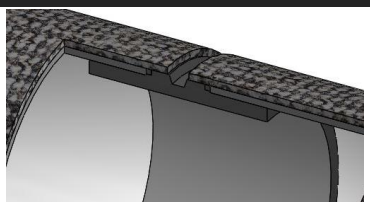

A steel sleeve machined to the V-groove depth minus the lagging thickness is inserted between two separate sections of pulley core and welded 360° from the outside. SWRT lagging is installed so it is flush with the edge of the v-groove.

NOTE:
V-groove clearances on pulleys are typically up to ¼" wider and 1/16" deeper than belting V-guide dimensions.

When V-grooves are required, consult the belt manufacturer's recommendations for minimum pulley diameter based on the type and style of belt being used.

CONVEYOR PULLEYS

Frequently Asked Questions

Solutions Through Innovation

GENERAL

Does a pulley's load capacity increase by increasing pulley material thicknesses?

While component thicknesses do contribute to overall pulley capacity, shaft diameter plays the primary role in achieving a desired load capacity. In other words, selecting a pulley with thicker components (Mine Duty over Heavy Duty, MC Series over FC Series) won't necessarily achieve a greater load capacity if the axle is not sized to accommodate the application loads.

What is the longest length of conveyor pulley that PCI can offer?

PCI can manufacture pulleys with face lengths greater than 14 feet. Pulleys of this length require special consideration to account for shaft deflection. Small diameter pulleys of increased face length commonly utilize fixed stub shafts in place of traditional through shaft designs. Fixed stub shafts decrease the likelihood of end disk fatigue as a result of shaft deflection. (For additional information, please see *PCI Pulley Selection Guide*)

When is a hub keyway needed in a conveyor pulley?

The purpose of a hub keyway is to help the transmission of torque from a shaft to the pulley in a drive application. Hub keyways are utilized on pulleys that are driving a belt. Most often, the pulley and belt are being turned by the shaft which is being powered by a motor, gearbox, or sprocket. The hub keyways provide the bushing another point of contact to help drive the torque from the motor or gearbox.

When is a hub keyway NOT needed in a conveyor pulley?

The pulley that is in a non-drive position, is driven by the belt and not the shaft. When utilizing compression hubs and bushings there is sufficient grip on the shaft from the bushings themselves. A hub keyway is not needed for pulleys that operate in driven (non-drive) positions.

DRUM PULLEYS

What is the difference between an FC Series and an MC Series Pulley?

The main difference between these products is the method used to crown the pulley face when a crown profile is specified. FC Series pulleys receive a crown that is formed into the face of the pulley while MCF Series pulleys utilize machining operations to accomplish the profile. Because MC Series pulleys require machining, they are typically constructed from thicker materials as well.

Are all MC Series pulleys provided with a fully machined face?

MC Series designates that when a crown is required, the crown is machined into the face of the pulley rather than formed into it. Flat face pulleys and non-crowned surfaces would not necessarily receive machining unless otherwise specified.

Does my application require a Heavy Duty or a Mine Duty conveyor pulley?

The difference between a Heavy Duty and a Mine Duty conveyor pulley is component thickness. The thicker the components used, the greater the series name (heavy, mine, etc.). Applications with impact loads require consideration of component thicknesses for purposes of strength. Applications with loose, bulk materials require consideration to account for abrasion resistance and the increased possibility of point loading between the pulley and belt.

Do Contoured Integral End Disks provide a greater load capacity than welded hub styles?

PCI Contoured Integral End Disks provide an even distribution of stress and reduce the risk of end disk fatigue near the hub. While this upgrade yields a higher safety factor for the drum pulley, if shaft size remains unchanged, the two drums achieve a similar load capacity.

CONVEYOR PULLEYS

Frequently Asked Questions

Solutions Through Innovation

WING PULLEYS

What applications benefit from using a Wing Style conveyor pulley?

Also known as self-cleaning pulleys, wing pulleys are primarily used on the tail end of bulk handling systems where loose materials tend to reside on the underside of the conveyor belt, causing damage to one or both components. Wing pulleys incorporate a non-continuous contact surface comprised of individual wings or fins. This construction results in the creation of open voids that allow loose material to fall away from the contact surface. In applications where continuous contact is desired, a spiral style or Eradicator® Wing pulley can be utilized.

How do I specify additional reinforcing agents such as gussets and reinforcing rings?

While we welcome your custom designs, PCI has designed our Wing Pulleys with standard options for construction choices like gussets and reinforcing rings. PCI Heavy Duty Wing pulleys feature the use of gussets while PCI Mine Duty Wing pulleys feature gussets and reinforcing rings as a standard design detail.

STAINLESS STEEL

What are the proper surface finishes for my stainless pulley application?

The surface finish of a conveyor pulley can drastically impact its performance in application. The finish provided on the conveyor pulley's surfaces will impact the amount of work required to fully eradicate contaminants from its surfaces. Generally speaking, the smoother the surface finish, the easier it will be to remove material from the surface. Because of the variance in available finishes and the work required to achieve them, surface finish should be carefully selected to ensure you receive the correct product at the optimum price.

What is the proper construction for my stainless pulley application?

The means by which a conveyor pulley is constructed can play a pivotal role in achieving performance success in application. The construction of a stainless steel conveyor pulley should be carefully selected to ensure the desired level of maintenance and sanitary compliance is achieved. These factors are heavily influenced by the location of the end disks, the pulleys hub style and axle detail specifications.

CONVEYING COMPONENTS AND ACCESSORIES

Solutions Through Innovation

ERADICATOR® MAX RETURN ROLLS

Patent #8,857,606

TAKE-UP FRAMES & COVERS

STAINLESS STEEL HUBS & BUSHINGS

COATINGS & LAGGING

PCI Eradi-Lag™
Patent #11,142,404

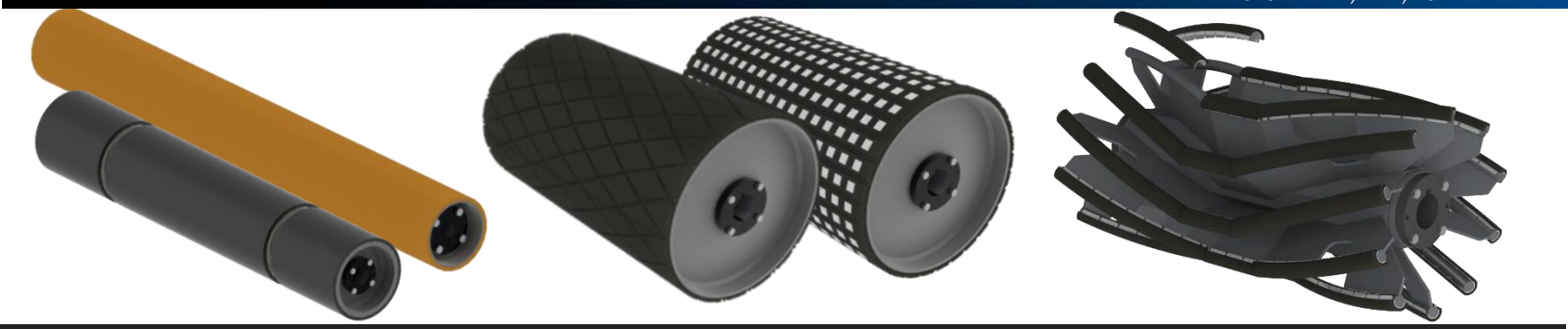

Pulley Quotation Worksheet

For selection assistance please consult "PCI PULLEY SELECTION GUIDE" or call PCI Customer Service at (989)358-6149.

Solutions Through Innovation

COMPANY NAME / BRANCH NO. _____ **COMPANY PHONE NO.** _____

YOUR NAME _____ **EMAIL ADDRESS** _____

QUANTITY _____ **ACCESSORIES REQUIRED: TAKE-UP FRAME PART#** _____ **BEARING PART#** _____ **BORE SIZE** _____

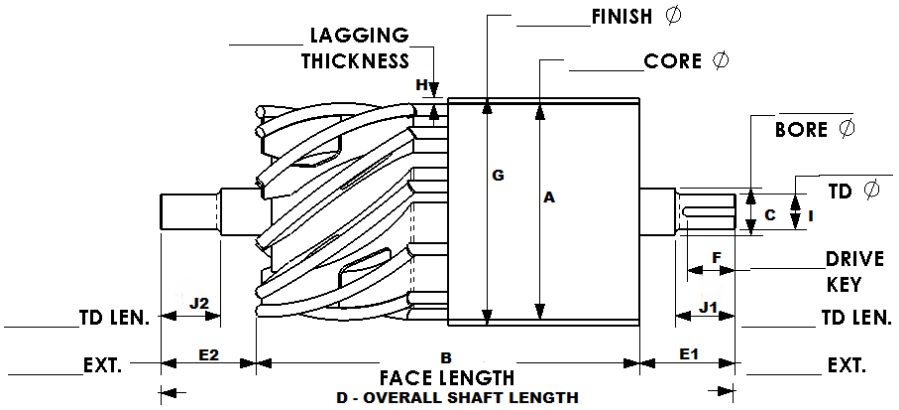

PULLEY POSITION: ☐Drive ☐Tail ☐Snub ☐Take-Up ☐ Bend

PULLEY PROFILE: ☐Flat Face ☐Crowned Face ☐ V-Groove: ____Section
Special V: _____X_____X_____

PULLEY CONFIGURATION: (choose one)

Drum-Package Handling: ☐FC Series ☐MC Series

Drum- Bulk Handling: ☐Standard Duty ☐Heavy Duty ☐Mine Duty

WING (traditional): ☐Standard Duty ☐Heavy Duty ☐Mine Duty ☐Other_____

ERADICATOR®: ☐Standard Duty ☐Heavy Duty ☐Mine Duty

ERADICATOR®-MAX:☐Standard Duty ☐Heavy Duty ☐Mine Duty

ERADICATOR®D²®: ☐Standard Duty ☐Heavy Duty ☐Mine Duty **Discharge:**☐Right ☐Left

ICE-ERADICATOR®: ☐Standard Duty ☐Heavy Duty ☐Mine Duty

STAINLESS: ☐Sanitary Class ☐Super Clean ☐Easy Clean ☐Extra Value

HUB TYPE: (choose one) Type C Internal bearings not available on Ice-Eradicator®

TYPE A: ☐ Plain Bore ☐With Welded Shaft

TYPE B: ☐Keyed Hub with Set Screws

TYPE C: ☐ "ER" Style Internal Bearings ☐Dead Shaft

CH&B: ☐XT® ☐QD® ☐TAPERLOCK® ☐XT® INTEGRAL ENDS
Preferred Hub Size_____

KLD: ☐ Keyless Locking Devices Brand Preference_____

A. Core Diameter _____

Pulley Core Thickness _____

B. Face Length _____

C. Main Shaft/Bore Dia. _____

D. OA Shaft Length _____

E_1. Extension Length _____

E_2. Extension Length _____

F. Keyway Length _____

G. Finish Diameter _____

H. Lagging Thickness _____

I. Turndown Dia. _____

☐One End ☐Both Ends

J_1. Turndown Length _____

J_2. Turndown Length _____

Bearing Centers _____

LAGGING: Durometer _____ Thickness _____ Color Preference _____

TYPE: ☐S.B.R. ☐Carboxylated Nitrile ☐E.P.D.M. ☐Neoprene ☐Nitrile ☐Urethane ☐S.W.R.T. ☐Weld-On ☐Ceramic ☐Food Grade

GROOVING: ☐HERRINGBONE ☐ CHEVRON ☐DIAMOND GROOVE DIRECTION: ☐Clockwise ☐Counterclockwise

KNURLING – Teeth Per Inch (TPI) ON CONTACT SURFACE ☐ Fine (25 TPI) ☐ Medium (16 TPI) ☐ Coarse (10 TPI)

ICE-ERADICATOR® PARAMETERS: ☐ USA ☐ Canada ☐ Other (Specify) _____

OPERATING TIME: Hours/day _____ Days/week _____ Weeks/year _____ **BELT SPEED (**ft/min):_____ **Lowest Temp:** _____☐°F☐°C